E5EC-8□□

OMRON

数字式控制器

CHN 使用说明书

感谢您购买欧姆龙E5EC数字式控制器。
本说明书描述了产品的功能、性能以及充分发挥产品使用效果的应用方法。
请在使用该产品时注意以下事项：
- 使用该产品的人必须具备足够的电气系统知识。
- 在使用该产品前应通读并理解本说明书以确保正确的使用。
- 妥善保管该说明书以确保在需要时可以随时查阅。

欧姆龙公司

©All Rights Reserved

Description in English is given on the reverse page.

有关详细的应用步骤，请参阅《E5□C数字式控制器用户手册》（Cat. No. H180）。

安全注意事项

●警告符号的要点

⚠ 警告 表示潜在的危险情况，如不加以防止，很可能导致轻度或中度的人身伤害或财产损坏。在使用该产品前应仔细阅读本说明书。

EC13 4057745-3B (Side-A)

●警告符号

⚠ 警告

通电期间，请勿触摸端子。 否则会因触电而导致轻伤。	⚠
不得让金属物体、导线或安装时产生的切屑或湿气进入控制器。否则会导致触电、火灾或机器误动作。	⊘
请勿将该产品用于有易燃易爆气体的场合。否则有可能因为爆炸而造成轻度伤害。	
绝对不要拆卸、改装以及修理该产品或接触任何内部元件。否则会导致轻微触电、火灾或机器误动作。	
注意－火灾或触电的危险 a) 本产品为UL Listing认证的开放型过程控制设备，必须安装在能够防止火花进出的机壳中。 b) 在使用两个以上断电开关的情况下，维修前请先断开所有开关，确保本产品处于断电状态。 c) 信号输入为SELV（安全低压电源），回路受限。 d) 注意：为了减少火灾或触电的危险，请勿将不同的2类回路的输出互联。	⚠
如果输出继电器超过了预期的使用寿命，有时会发生触点熔化或燃烧。始终要注意输出继电器的应用环境，并在额定负载及预期寿命以内使用。输出继电器的预期寿命随着输出负载以及开关条件的变化而变化。	
松动的螺丝可能导致火灾。请以指定的0.43～0.58 N・m的指定扭矩拧紧螺丝。	❗
请设定适合系统控制用的产品参数。如果设定不当，可能会因意外操作而造成财产损失或事故。	
控制器误动作很可能造成控制操作失效或阻止报警输出，导致财产损失。为了在控制器发生误动作时确保安全，应采取适当的安全措施，如使用单独的线路安装监控设备。	

使用时的注意事项

在客户的应用中，欧姆龙不负责产品与任何客户端产品所涉及的规格、规范和标准保持一致性。请务必考虑本产品对于所应用的系统、机器和设备间的适用性。使用时请注意并遵守本产品的禁止事项。
在没有确认整个系统设计时所考虑到的风险，以及没有确认在设备和系统中该欧姆龙产品的额定使用条件和正确安装条件的情况下，禁止将本产品应用于对人身及财产存在严重危险的场合。
详见产品规格书中保证及免责事项内容。

安全使用注意事项

请务必遵守以下注意事项，以避免操作失误、误动作或对产品特性及功能造成不良影响。否则，可能会导致意外事故。请在指定范围内使用本产品。
(1) 该产品只被设计为室内使用。请勿在室外使用。请勿在以下任何地方使用或存放该产品。
- 直接受加热设备热辐射的地方。
- 有液体或油气飞溅的地方。
- 阳光直射的地方。
- 灰尘较多或有腐蚀性气体（特别是硫化物气体和氨气）的地方。
- 温度剧烈变化的地方。
- 结冰和结露的地方。
- 有震动或大的冲击的地方。

(2) 在额定的温度和湿度范围内使用 / 存储该设备。必要时应采取强制冷却。
(3) 为利于散热，不要填塞该产品周围的空间。
不要堵塞产品的通风孔。
(4) 按端子的信号名和极性进行正确的接线。
(5) 请使用规定尺寸的压接端子（M3，宽度小于或等于 5.8 mm）进行接线。使用标有 AWG24 ～ AWG18（相当于横截面积 0.205 ～ 0.8231mm²）的铜绞线或实心电缆连接裸线和接线板。（剥线长度为 6 ～ 8 mm。）一个端子内最多插入两根相同型号尺寸的导线或压接端子。
(6) 不用的端子不要接线。
(7) 在控制器与可以产生高频和浪涌的设备之间应保持足够远的距离。将高压或大电流电源线与其它导线隔离，在端子接线时避免与电源线共端或并联。
(8) 在额定负载和供电电源下使用该产品。
(9) 使用开关或继电器触点以确保在两秒内将电源升为额定电压。如果电压是逐渐上升的，电源可能无法复位或者发生输出误动作。
(10) 在接通电源到开始实际操作前应确保控制器进行 30 分钟以上的预热，以保证正确的温度显示。
(11) 执行自校正时，请向时接通负载和设备或者在接通控制器前接通负载。
(12) 在该产品的附近应该有开关或者断路器。开关或者断路器应该在操作者便于够到的地方，并且有明显的断开标志。
(13) 清洁时，请用软布擦拭。请勿使用稀释剂，汽油、酒精等含溶剂的药品。否则会导致变形或变色。
(14) 在设计系统（如控制面板）的时候，需要考虑到控制器的输出在电源上电后有 2 秒的延时。
(15) 当切换到初始设定菜单时，输出可能会关闭。在实施控制时需要考虑到这一点。
(16) 非挥发内存的写次数是有限的。所以在通信或其它操作需要频繁重写数据时，请使用 RAM 写模式。
(17) 拆卸控制器进行废弃处理时，请使用适当的工具。
(18) 请勿超过规格中给出的通信距离并使用指定的通信电缆。关于通信距离和电缆规格，请参阅《E5□C 数字式控制器用户手册》（Cat. No. H180）。
(19) 端子台温度高达 75℃，请多加小心。
(20) 从后机壳中拉出内部基板时，一定要关闭电源，不要碰到端子或者电子元件。在把内部基板插入时，不要让电子元件碰到后机壳。

●规格

供电电压	100～240 VAC，50/60 Hz或者 24 VAC，50/60 Hz/24 VDC
工作电压范围	额定电压的85～110%
功率消耗 选项800：	最大6.6VA（100～240 VAC） 最大4.1VA（24 VAC）/最大2.3W（24 VDC）
所有其它规格：	最大8.3VA（100～240VAC） 最大5.5VA（24 VAC）/最大3.2W（24 VDC）
指示精度 （环境温度：23°C）	热电偶输入： （显示值的±0.3%或者±1°C中的较大值） 最大±1位数 铂电阻输入： （显示值的±0.2%或者±0.8°C中的较大值） 最大±1位数 模拟量输入：±0.2 % FS 最大±1位数
事件输入 触点输入 非触点输入	输出电流：每个触点约7 mA。 ON：最大1 kΩ，OFF：至少 100 kΩ ON：残余电压最大1.5 V OFF：漏电流最大0.1 mA
电位器输入	最大开启位置在100Ω～10kΩ之间
控制输出1	继电器输出：SPST-NO， 250 VAC，5 A（阻性负载） 继电器电气寿命：100,000次运行 电压输出（用于驱动SSR）： 12 VDC ±20%，40 mA（对于一个控制输出）， 21 mA（对于两个控制输出） 线性电流输出：4～20 mA DC、0～20 mA DC 负载：最大500 Ω
控制输出2	继电器输出：SPST-NO， 250 VAC，5 A（阻性负载） 继电器电气寿命：100,000次运行 电压输出（用于驱动SSR）： 12 VDC ±20%，21 mA
控制方法	ON/OFF或2路PID控制
辅助输出	继电器输出：250 VAC，3 A（阻性负载） 继电器电气寿命：100,000次运行
环境温度	–10～55°C （应避免结冰或结露）
环境湿度 存储温度	RH 25～85% –25～65°C （应避免结冰或结露）
高度	最高2,000米
推荐保险丝	T2A，250 VAC，时延，低熔断容量
重量	约210 g（仅数字控制器）
防护等级	前面板：IP66 后壳：IP20，端子：IP00
安装环境	安装种类II， 污染等级2(IEC61010-1)
内存保护 暂时过电压	非挥发内存（写次数：1, 000, 000） 短时间过电压 1200V+（电源电压） 长时间过电压 250V+ （电源电压）

■接线

●尺寸规格

尺寸（mm）

非焊接端子尺寸：M3

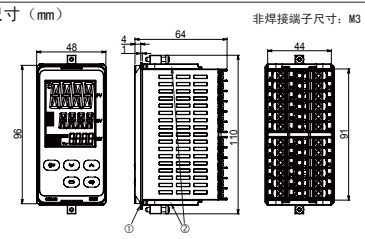

在包装内有：
- 主单元
- 使用说明书
- 防水密封圈（Y92S-P9）：①
- 两个适配器（Y92F-51）：②

另售件
- 端子盖（E53-C0V24）
- 拉出工具（Y92F-59）

＊不用卸下端子接线，就能够将内部本体拉出。
＊请勿拆下接线板。否则，会导致故障或误动作。

●安装

单个安装（mm）

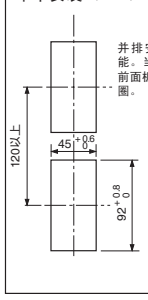

并排安装无法确保防水性能。当有防水要求时，请在前面板的后侧安装防水密封圈。

并排安装（mm）

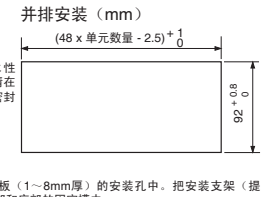

- 将主单元插入面板（1～8mm厚）的安装孔中。把安装支架（提供）插入后壳顶部和底部的固定槽中。
- 拧紧适配器顶部和底部的两颗安装螺丝使其保持平衡，最终使其扭矩保持在0.29至0.39N·m之间。
- 当安装多台机器时，请确保环境温度不超过规定限值。

●连接（端子适用性因机器型号而异。）

请勿在灰色端子上连接任何器件。

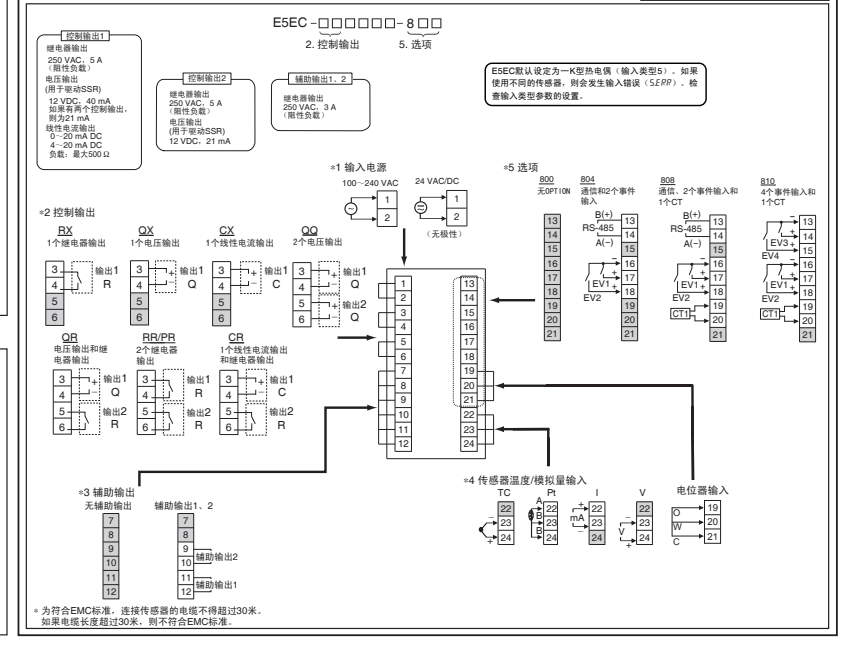

＊为符合EMC标准，连接传感器的电缆不得超过30米。
如果电缆长度超过30米，则不符合EMC标准。

●前面板的元件名称

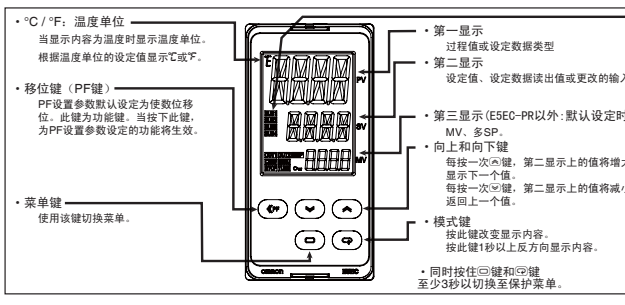

■操作菜单

●输入类型

	输入类型	输入	设定	设定范围 °C	设定范围 °F
温度输入	铂电阻温度计	Pt100	0	-200～850	-300～1500
			1	-199.9～500.0	-199.9～900.0
			2	0.0～100.0	0.0～210.0
		JPt100	3	-199.9～500.0	-199.9～900.0
			4	0.0～100.0	0.0～210.0
	热电偶	K	5	-200～1300	-300～2300
			6	-20.0～500.0	0.0～900.0
		J	7	-100～850	-100～1500
			8	-20.0～400.0	0.0～750.0
		T	9	-200～400	-300～700
			10	-199.9～400.0	-199.9～700.0
		E	11	-200～600	-300～1100
		L	12	-100～850	-100～1500
		U	13	-200～400	-300～700
			14	-199.9～400.0	-199.9～700.0
		N	15	-200～1300	-300～2300
		R	16	0～1700	0～3000
		S	17	0～1700	0～3000
		B	18	100～1800	300～3200
		W	19	0～2300	0～3200
		PLII	20	0～1300	0～2300
	红外温度传感器ES1B	10～70°C	21	0～90	0～190
		60～120°C	22	0～120	0～240
		115～165°C	23	0～165	0～320
		140～260°C	24	0～260	0～500
模拟量输入类型	电流输入	4～20 mA	25	对比例缩放可采用下列范围：-1999～9999、-199.9～999.9、-19.99～99.99、-1.999～9.999	
		0～20 mA	26		
	电压输入	1～5 V	27		
		0～5 V	28		
		0～10 V	29		

＊默认值是"5"。
＊当输入类型不是铂电阻而错误的将铂电阻接入时，将会显示S.ERR。若要清除S.ERR显示，需要正确接线并重新上电。

●报警

	设定	报警类型	报警输出功能 正报警值（X）	报警输出功能 负报警值（X）
	0	无报警功能	无输出	
*1	1	偏差上/下限		根据L、H值的不同而不同
	2	偏差上限		
	3	偏差下限		
*1	4	偏差上/下范围		根据L、H值的不同而不同
*1	5	偏差上/下限待机序列ON		根据L、H值的不同而不同
	6	偏差上限待机序列ON		
	7	偏差下限待机序列ON		
	8	绝对值上限		
	9	绝对值下限		
	10	绝对值上限待机序列ON		
	11	绝对值下限待机序列ON		
	12	LBA（仅对报警1）		
	13	PV变化率报警		
	14	SP绝对值上限		
	15	SP绝对值下限		
	16	MV绝对值上限		
	17	MV绝对值下限		

*1：要使参数1、4和5提供不同的报警类型，可对其设定上限与下限。下限和上限分别用字母L和H指示。
・默认的报警类型为"2"

⚠ 符合EN/IEC标准

这是一种A类产品。
因其在住宅区中会导致无线电干扰，所以要求用户采取适当的措施减少干扰。

●初始设定菜单

运行停止。（控制/报警均停止。）*5

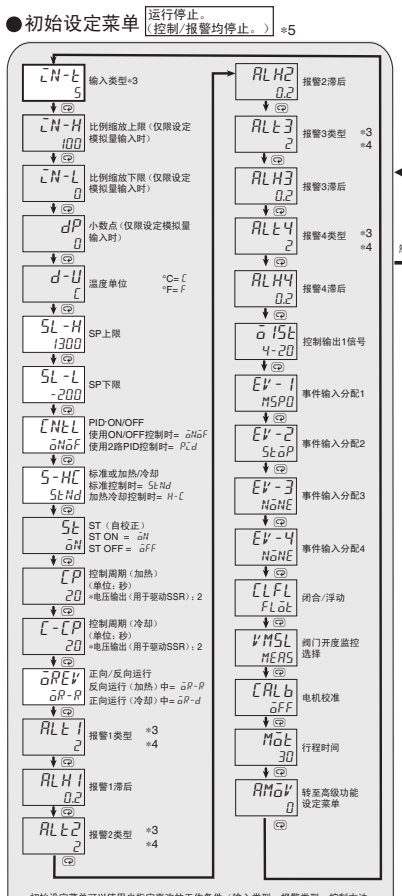

初始设定菜单可以使用户指定喜欢的工作条件（输入类型，报警类型，控制方法等等）。

*3：关于输入类型和报警类型的详细情况，请参考旁边的表格。
*4：仅适用于有报警功能的型号。
*5：当转至初始设定菜单时运行停止。
（控制/报警均停止。）
*6：根据型号和设定的不同，有些灰色的设定项目可能不显示。
*7：仅适用于有加热器断线功能的型号。

⚠ 符合安全标准

在输入电源、继电器输出之间以及其它端子之间提供了强化绝缘。
务必使得电源一次侧上发生的瞬间过电压不要超过以下电压值。 还请按照本产品的电源电压进行确认。 短时间过电压：1200V+ （电源电压） 长时间过电压：250V+ （电源电压）
在使用本产品时，请务必外接说明书上推荐的保险丝。
关于模拟输入 ・输入电压或电流时，请按照本产品的输入类别设定输入类型。 ・请勿将本产品用来测定"测量范畴为II、III、IV"的回路。 ・请勿将本产品用来测定"印加电压超过30Vrms或60VDC"的对象。
如果产品未按本公司指定的方法使用，那么产品具备的保护功能很可能损坏。

通电之前检查接线。

通电

●操作菜单

按住⊖至少3秒（第一显示闪烁，然后控制停止。）

按住⊖至少1秒

（此处省略了第三显示画面。）

操作时应正常使用操作菜单。

按住⊖（不超过1秒）

按住⊖和⊕键至少1秒 ↑ ↓ 按住⊖和⊕键至少3秒

●保护菜单

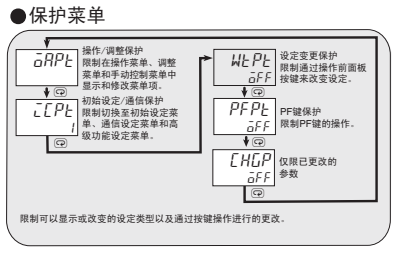

限制可以显示或改变的设定类型以及通过按键操作进行的更改。

■其它功能

有关高级功能设定菜单、手动控制菜单以及其它功能的详细信息，请参阅《E5□C数字式控制器用户手册》（Cat. No. H180）。
有关通信的详细信息，请参阅《E5□C数字式控制器通信手册》（Cat. No. H181）。

●调整菜单

只有参数"AH5、温度输入偏移"中的设定值应用于整个温度输入范围。如果输入偏移值设定为1.2°C，则过程值为202°C时，经过输入偏移后将为201.2°C处理。
而如果输入偏移值设定为-1.2°C，则经过输入偏移后过程值按照198.8°C处理。

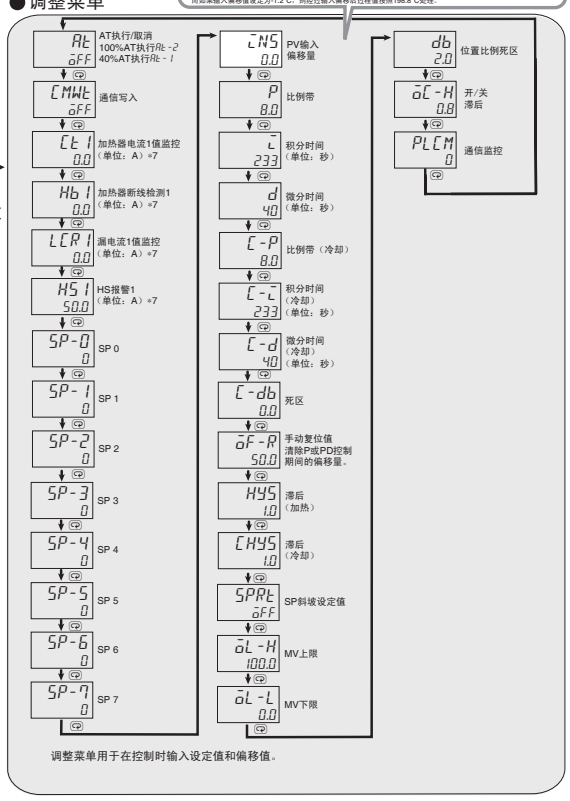

调整菜单用于在控制时输入设定值和偏移值。

●错误显示（故障诊断）

当发生一个错误时，第一显示将显示错误代码。参考下表，根据错误代码采取适当的措施。

第一显示	含义	操作	出错状态 控制输出	出错状态 报警
S.ERR (S. Err)	输入错误 *2	检查输入类型参数的设置，检查输入接线并检查温度传感器是否存在破损或短接。	OFF	动作同上述上限报警
E333 (E333)	A/D转换错误 *2	确认输入错误之后，关掉电源再打开。如果显示不变，则须修理控制器。如果显示恢复正常，则故障原因可能是控制系统受到外部干扰。请检查外部干扰。	OFF	OFF
E111 (E111)	内存错误	关掉电源再打开，如果显示不变，则须修理控制器。如果显示恢复正常，则可能是控制系统受到外部干扰。检查外部干扰。	OFF	OFF

如果输入值超出了显示范围（-1999～9999），即使它仍然在控制范围内，低于-1999的将显示 [cccc]，高于9999的显示 [oooo]。在这种情况下，控制输出和报警输出工作正常。关于可控制的范围，请参阅《E5□C数字式控制器用户手册》（Cat. No. H180）。

*2：错误显示只针对"过程值/设定值"，而不针对其它状态。

■联系方式

● 制造商
欧姆龙（上海）有限公司
地址：中国上海市浦东新区金桥出口加工区金吉路789号
电话：(86)21-50509988

● 技术咨询
欧姆龙自动化（中国）有限公司
地址：中国上海市浦东新区银城中路200号中银大厦2211室
电话：(86)21-5037-2222

技术咨询热线：400-820-4535
网址：http://www.fa.omron.com.cn

E5EC-8□□

OMRON

Digital Controller

EN INSTRUCTION MANUAL

Thank you for purchasing the OMRON E5EC Digital Controller. This manual describes the functions, performance, and application methods needed for optimum use of the product. Please observe the following items when using the product.

- This product is designed for use by qualified personnel with a knowledge of electrical systems.
- Before using the product, thoroughly read and understand this manual to ensure correct use.
- Keep this manual in a safe location so that it is available for reference whenever required.

OMRON Corporation

©All Rights Reserved

Refer to the *E5□C Digital Controllers User's Manual* (Cat. No. H174) for detailed application procedures.

Safety Precautions

●Key to Warning Symbols

⚠ CAUTION	Indicates a potentially hazardous situation which, if not avoided, is likely to result in minor or moderate injury or property damage. Read this manual carefully before using the product.

4057745-3B (Side-B)

●Warning Symbols

⚠ CAUTION	
Minor injury due to electric shock may occasionally occur. Do not touch the terminals while power is being supplied.	⚠
Electric shock, fire, or malfunction may occasionally occur. Do not allow metal objects, conductors, cuttings from installation work, or moisture to enter the Digital Controller.	
Do not use the product where subject to flammable or explosive gas. Otherwise, minor injury from explosion may occasionally occur.	⊘
Never disassemble, modify, or repair the product or touch any of the internal parts. Minor electric shock, fire, or malfunction may occasionally occur.	
CAUTION - Risk of Fire and Electric Shock a) This is the product UL listed as Open Type Process Control Equipment. It must be mounted in an enclosure that does not allow fire to escape externally. b) More than one disconnect switch may be required to de-energize the equipment before servicing. c) Signal inputs are SELV, limited energy. d) Caution: To reduce the risk of fire or electric shock, do not interconnect the outputs of different Class 2 circuits.	⚠
If the output relays are used past their life expectancy, contact fusing or burning may occasionally occur. Always consider the application conditions and use the output relays within their rated load and electrical life expectancy. The life expectancy of output relays varies considerably with the output load and switching conditions.	
Loose screws may occasionally result in fire. Tighten the terminal screws to the specified torque of 0.43 to 0.58 N·m.	❗
Set the parameters of the product so that they are suitable for the system being controlled. If they are not suitable, unexpected operation may occasionally result in property damage or accidents.	
A malfunction in the Temperature Controller may occasionally make control operations impossible or prevent alarm outputs, resulting in property damage. To maintain safety in the event of malfunction of the Digital Controller, take appropriate safety measures, such as installing a monitoring device on a separate line.	

Suitability for Use

Omron Companies shall not be responsible for conformity with any standards, codes or regulations which apply to the combination of the Product in the Buyer's application or use of the Product.

At Buyer's request, Omron will provide applicable third party certification documents identifying ratings and limitations of use which apply to the Product. This information by itself is not sufficient for a complete determination of the suitability of the Product in combination with the end product, machine, system, or other application or use. Buyer shall be solely responsible for determining appropriateness of the particular product with respect to Buyer's application, product or system. Buyer shall take application responsibility in all cases.

NEVER USE THE PRODUCT FOR AN APPLICATION INVOLVING SERIOUS RISK TO LIFE OR PROPERTY WITHOUT ENSURING THAT THE SYSTEM AS A WHOLE HAS BEEN DESIGNED TO ADDRESS THE RISKS, AND THAT THE OMRON PRODUCT(S) IS PROPERLY RATED AND INSTALLED FOR THE INTENDED USE WITHIN THE OVERALL EQUIPMENT OR SYSTEM.

Precautions for Safe Use

Be sure to observe the following precautions to prevent operation failure, malfunction, or adverse affects on the performance and functions of the product. Not doing so may occasionally result in unexpected events. Use the product within specifications.

(1) The product is designed for indoor use only. Do not use the product outdoors. Do not use or store the product in any of the following locations.
- Places directly subject to heat radiated from heating equipment.
- Places subject to splashing liquid or oil atmosphere.
- Places subject to direct sunlight.
- Places subject to dust or corrosive gas (in particular, sulfide gas and ammonia gas).
- Places subject to intense temperature change.
- Places subject to icing and condensation.
- Places subject to vibration and large shocks.

(2) Use/store within the rated temperature and humidity ranges. Provide forced-cooling if required.
(3) To allow heat to escape, do not block the area around the product. Do not block the ventilation holes on the product.
(4) Be sure to wire properly with the correct signal name and polarity of terminals.
(5) Use the specified size of crimped terminals (M3, width 5.8 mm or less) for wiring. To connect bare wires to the terminal block, use copper braided or solid wires with a gage of AWG24 to AWG18 (equal to a cross-sectional area of 0.205 to 0.8231 mm²). (The stripping length is 6 to 8 mm.). Up to two wires of same size and type, or two crimped terminals can be inserted into a single terminal.
(6) Do not wire the terminals which are not used.
(7) Allow as much space as possible between the controller and devices that generate a powerful high-frequency or surge. Separate the high-voltage or large-current power lines from other lines, and avoid parallel or common wiring with the power lines when you are wiring to the terminals.
(8) Use this product within the rated load and power supply.
(9) Make sure that the rated voltage is attained within two seconds of turning ON the power using a switch or relay contact. If the voltage is applied gradually, the power may not be reset or output malfunctions may occur.
(10) Make sure that the Digital Controller has 30 minutes or more to warm up after turning ON the power before starting actual control operations to ensure the correct temperature display.
(11) When executing self-tuning, turn the load and the unit ON simultaneously, or turn the load ON before you turn the controller ON.
(12) A switch or circuit breaker should be provided close to this unit. The switch or circuit breaker should be within easy reach of the operator, and must be marked as a disconnecting means for this unit.
(13) Wipe off any dirt from the Digital Controller with a soft dry cloth. Never use thinners, benzine, alcohol, or any cleaners that contain these or other organic solvents. Deformation or discoloration may occur.
(14) Design system (control panel, etc) considering the 2 second of delay that the controller's output to be set after power ON.
(15) The output will turn OFF when you move to the Initial Setting Level. Take this into consideration when performing control.
(16) The number of non-volatile memory write operations is limited. Therefore, use RAM write mode when frequently overwriting data during communications or other operations.
(17) When disassembling the Digital Controller for disposal, use suitable tools.
(18) Do not exceed the communications distance that is given in the specifications and use the specified communications cable. Refer to the *E5□C Digital Controllers User's Manual* (Cat. No. H174) for the communications distance and cable specifications.
(19) The maximum terminal temperature is 75°C.
(20) Always turn OFF the power supply before pulling out the interior of the product, and never touch nor apply shock to the terminals or electronic components. When inserting the interior of the product, do not allow the electronic components to touch the case.

●Specifications

Power supply voltage	100 to 240 VAC, 50/60 Hz or 24 VAC, 50/60 Hz / 24VDC
Operating voltage range	85 to 110% of the rated voltage
Power consumption Option 800: All other specifications:	 6.6 VA max. (100 to 240 VAC) 4.1 VA max. (24 VAC)/2.3 W max. (24 VDC) 8.3 VA max. (100 to 240 VAC) 5.5 VA max. (24 VAC)/3.2 W max. (24 VDC)
Indication accuracy (Ambient temperature: 23°C)	Thermocouple: (±0.3 % of indication value or ±1°C, whichever is greater) ±1 digit max. Platinum resistance thermometer: (±0.2 % of indication value or ±0.8°C, whichever is greater) ±1 digit max. Analog input: ±0.2 % FS ±1 digit max.
Event input Contact input No-contact input	Output current: approx. 7 mA per contact. ON:1 kΩ max., OFF: 100 kΩ min. ON: residual voltage 1.5 V max., OFF: leakage current 0.1 mA max.
Potentiometer input	Between 100Ω~10kΩ for maximum open position.
Control output 1	Relay output: SPST-NO, 250 VAC, 5 A (resistive load) Electrical life of relay: 100,000 operations Voltage output (for driving SSR): 12 VDC ±20%, 40 mA for one control output, 21 mA if there are two control outputs Linear current output: 4 to 20 mA DC, 0 to 20 mA DC Load: 500Ω max.
Control output 2	Relay output: SPST-NO, 250 VAC, 5 A (resistive load) Electrical life of relay: 100,000 operations Voltage output (for driving SSR): 12 VDC ±20%, 21 mA
Control method	ON/OFF or 2-PID control
Auxiliary outputs	Relay outputs: 250 VAC, 3 A (resistive load) Electrical life of relay: 100,000 operations
Ambient temperature	–10 to 55°C (Avoid freezing or condensation)
Ambient humidity	25% to 85%
Storage temperature	–25 to 65°C (Avoid freezing or condensation)
Altitude	Max. 2,000 m
Recommended fuse	T2A, 250 VAC, time-lag, low-breaking capacity
Weight	Approx. 210 g (Digital Controller only)
Degree of protection	Front panel: IP66 Rear case: IP20, Terminal section: IP00
Installation environment	Installation category II, pollution degree 2 (as per IEC61010-1)
Memory protection	Non-volatile memory (Number of write operations: 1,000,000)
Temporary overvoltage	Short term: 1200 V+ (power supply voltage) Long term: 250 V+ (power supply voltage)

■Wiring

●Dimensions

Dimensions (mm)

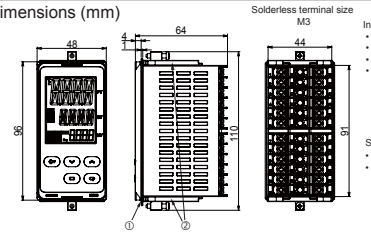

In the pack:
- Main unit
- Instruction manual
- Watertight packing (Y92S-P9): ①
- Two adapters (Y92F-51): ②

Sold Separately
- Terminal cover (E53-COV24)
- Draw-out jig (Y92F-59)

* The interior of the product can be removed for maintenance without disconnecting the terminal wiring.
* Do not remove the terminal block. Doing so may result in failure or malfunction.

●Installation

Individual mounting (mm)

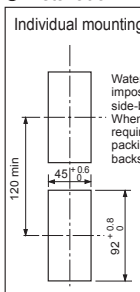

Waterproofing is impossible with side-by-side installation. When waterproofing is required, fit watertight packing on the backside of front panel.

Side-by-side mounting (mm)

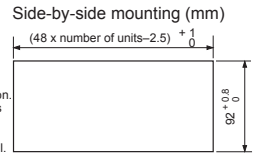

- Insert the product through the mounting hole in the panel (1-8 mm thickness). Insert the mounting brackets (supplied) into the fixing slots located on the top and bottom of the rear case.
- Tighten the two mounting screws on the top and bottom of the adapter to keep them balanced, and finally tighten them to a torque of between 0.29 and 0.39 N·m.
- When more than one machine is installed, make sure that the ambient temperature does not exceed the specified limit.

●Connections (The applicability of the electric terminals varies with the type of machine.)

Do not connect anything to the terminals that are shaded gray.

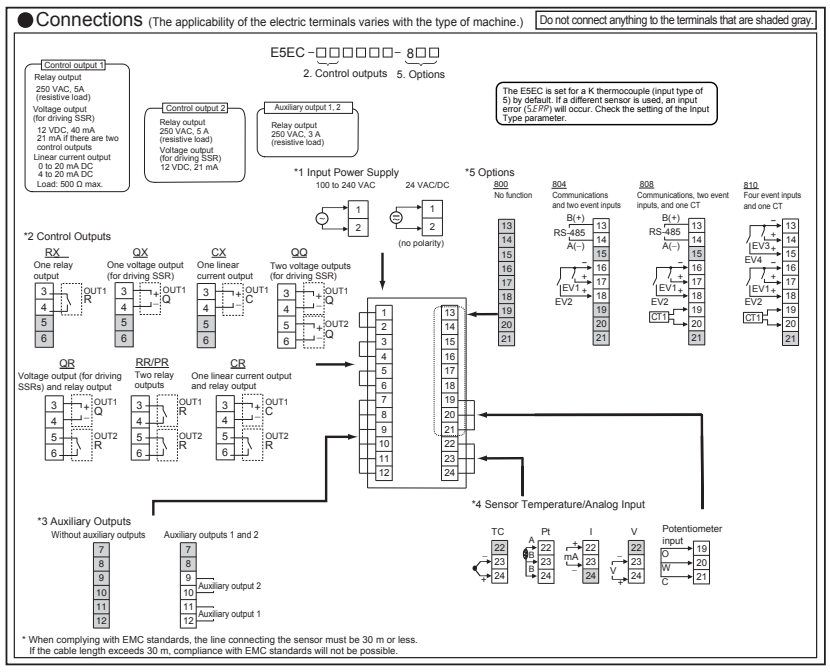

●Names of Parts on Front Panel

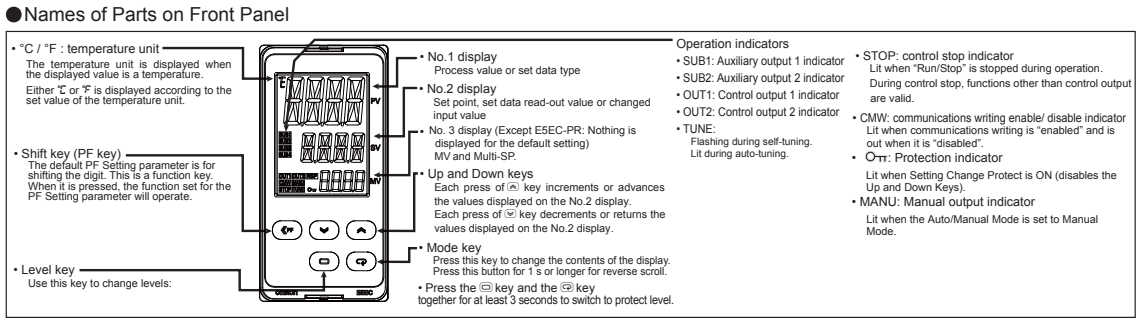

■Operation Menu

●Input Type

	Input type	Input	Setting	Setting range °C	Setting range °F
Temperature inputs	Platinum resistance thermometer	Pt100	0	-200 to 850	-300 to 1500
			1	-199.9 to 500.0	-199.9 to 900.0
			2	0.0 to 100.0	0.0 to 210.0
		JPt100	3	-199.9 to 500.0	-199.9 to 900.0
			4	0.0 to 100.0	0.0 to 210.0
	Thermocouple	K	5	-200 to 1300	-300 to 2300
			6	-20.0 to 500.0	0.0 to 900.0
		J	7	-100 to 850	-100 to 1500
			8	-20.0 to 400.0	0.0 to 750.0
		T	9	-200 to 400	-300 to 700
			10	-199.9 to 400.0	-199.9 to 700.0
		E	11	-200 to 600	-300 to 1100
		L	12	-100 to 850	-100 to 1500
		U	13	-200 to 400	-300 to 700
			14	-199.9 to 400.0	-199.9 to 700.0
		N	15	-200 to 1300	-300 to 2300
		R	16	0 to 1700	0 to 3000
		S	17	0 to 1700	0 to 3000
		B	18	100 to 1800	300 to 3200
		W	19	0 to 2300	0 to 3200
		PLII	20	0 to 1300	0 to 2300
	Infrared Thermosensor ES1B	10 to 70°C	21	0 to 90	0 to 190
		60 to 120°C	22	0 to 120	0 to 240
		115 to 165°C	23	0 to 165	0 to 320
		140 to 260°C	24	0 to 260	0 to 500
Analog input type	Current input	4 to 20mA	25	Use the following ranges for scaling: -1999 to 9999, -199.9 to 999.9, -19.99 to 99.99, -1.999 to 9.999	
		0 to 20mA	26		
	Voltage input	1 to 5V	27		
		0 to 5V	28		
		0 to 10V	29		

*The default is "5".
*S.ERR will be displayed when a platinum resistance thermometer is mistakenly connected while input type is not set for it. To clear the S.ERR display, correct the wiring and cycle the power supply.

●Alarms

	Setting	Alarm type	Alarm output function: Positive alarm value (X)	Alarm output function: Negative alarm value (X)
	0	No alarm function	Output off	
*1	1	Deviation upper/lower limit	Vary with "L", "H" values	
	2	Deviation upper limit		
	3	Deviation lower limit		
*1	4	Deviation upper/lower range	Vary with "L", "H" values	
*1	5	Deviation upper/lower limit standby sequence ON	Vary with "L", "H" values	
	6	Deviation upper limit standby sequence ON		
	7	Deviation lower limit standby sequence ON		
	8	Absolute value upper limit		
	9	Absolute value lower limit		
	10	Absolute value upper limit standby sequence ON		
	11	Absolute value lower limit standby sequence ON		
	12	LBA (only for alarm 1)		
	13	PV Change Rate Alarm		
	14	SP absolute value upper limit		
	15	SP absolute value lower limit		
	16	MV absolute value upper limit		
	17	MV absolute value lower limit		

*1: Upper and lower limits can be set for parameters 1, 4 and 5 to provide for different types of alarm. These are indicated by the letter "L" and "H".
• The default alarm type is "2"

⚠ Conformance to EN/IEC Standards

This is a class A product.
In residential areas it may cause radio interference, in which case the user may be required to take adequate measures to reduce interference.

A 급 기기 (업무용 방송통신기자재)
이 기기는 업무용(A 급) 전자파적합기기로서 판매자또는 사용자는 이 점을 주의하시기 바라며, 가정외의지역에서 사용하는 것을 목적으로 합니다.

●Initial Setting Level

Operation stopped. (Control/alarm are both stopped.)

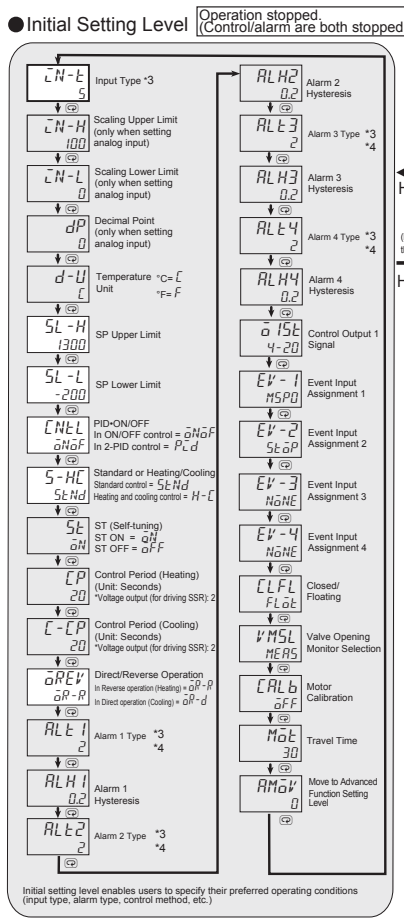

Initial setting level enables users to specify their preferred operating conditions (input type, alarm type, control method, etc.)

*3: Refer to the adjoining tables for details of input types and alarm types.
*4: Applicable only to models with alarm functions.
*5: Operation is stopped when moved to the initial setting level. (control/alarm are both stopped.)
*6: The grayed-out setting items may not be displayed according to the models and setting.
*7: Applicable only to models with heater burnout functions.

⚠ Conformance to Safety Standard

Reinforced insulation is provided between input power supply, relay outputs, and between other terminals.
Do not allow temporary overvoltages on the primary circuit to exceed the following values. Check the power supply voltage to the Digital Controller. Short-term overvoltage: 1,200 V + (Power supply voltage) Long-term overvoltage: 250 V + (Power supply voltage)
Always externally connect the recommended fuse that is specified in the Instruction Manual before you use the Digital Controller.
Analog Input • If you input an analog voltage or current, set the Input Type parameter to the correct input type. • Do not use the Digital Controller to measure a circuit with Measurement Category II, III, or IV. • Do not use the Digital Controller to measure an energized circuit to which a voltage that exceeds 30 Vrms or 60 VDC is applied.
The protection provided by the Digital Controller may be impaired if the Digital Controller is used in a manner that is not specified by the manufacturer.

Check the wiring before turning ON the power supply.

POWER ON

●Operation Level

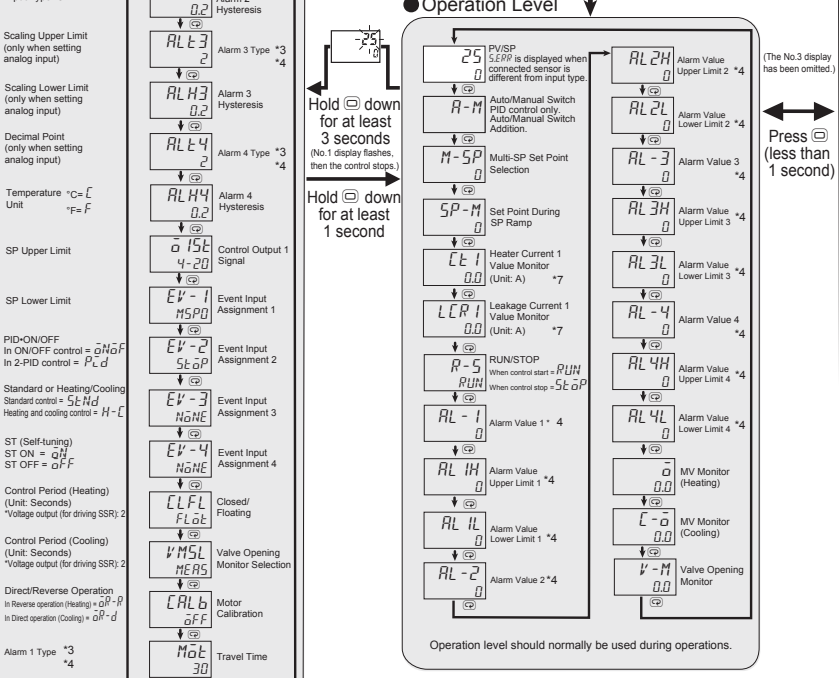

Operation level should normally be used during operations.

Hold and keys down for at least 1 second

Hold and keys down for at least 3 seconds

●Protect Level

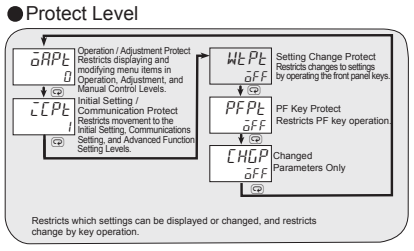

Restricts which settings can be displayed or changed, and restricts change by key operation.

■Other functions

Refer to the *E5□C Digital Controllers User's Manual* (Cat. No. H174) for information on the Advanced Function Setting Level, Manual Control Level, and other functions.
Refer to the *E5□C Digital Controllers Communications Manual* (Cat. No. H175) for information on communications.

●Adjustment Level

Only the value set to the "AH5: Temperature Input Shift" parameter is applied to the entire temperature input range. When the process value is 200 °C, the process value is treated as 201.2 °C after input shift if the input shift value is set to 1.2 °C. The process value is treated as 198.8 °C after input shift if the input shift value is set to –1.2 °C.

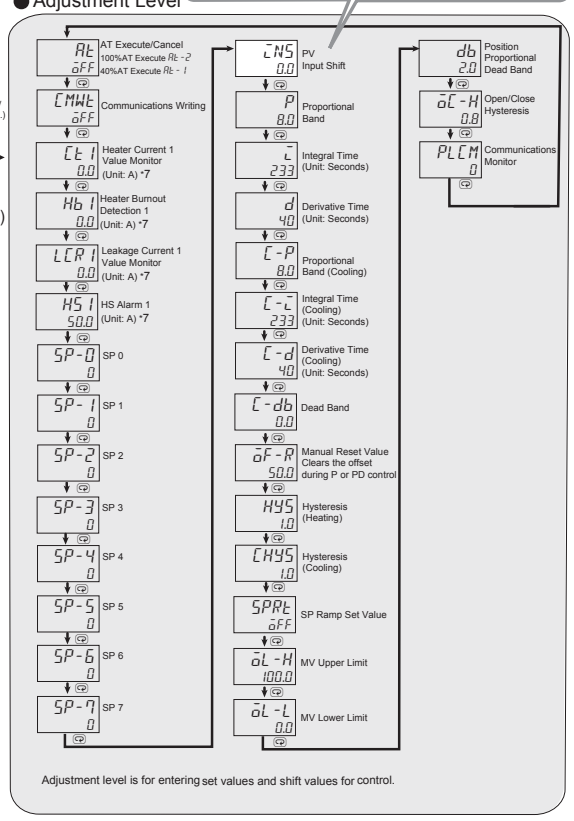

Adjustment level is for entering set values and shift values for control.

●Error Display (troubleshooting)

When an error has occurred, the No.1 display shows the error code. Take necessary measure according to the error code, referring the table below.

No.1 display	Meaning	Action	Status at error: Control output	Status at error: Alarm
S.ERR (S. Err)	Input error *2	Check the setting of the Input Type parameter, check the input wiring, and check for broken or shorts in the temperature sensor.	OFF	Operates as above the upper limit.
E333 (E333)	A/D converter error *2	After the check of Input error, turn the power OFF then back ON again. If the display remains the same, the controller must be repaired. If the display is restored to normal, then a probable cause can be external noise affecting the control system. Check for external noise.	OFF	OFF
E111 (E111)	Memory error	Turn the power OFF then back ON again. If the display remains the same, the controller must be repaired. If the display is restored to normal, then a probable cause can be external noise affecting the control system. Check for external noise.	OFF	OFF

If the input value exceeds the display limit (-1999 to 9999), though it is within the control range, cccc will be displayed under -1999 and oooo above 9999. Under these conditions, control output and alarm output will operate normally. Refer to the *E5□C Digital Controllers User's Manual* (Cat. No. H174) for the controllable ranges.

*2: Error shown only for "Process value / Set point". Not shown for other status.

OMRON EUROPE B.V.
Wegalaan 67-69, NL-2132 JD Hoofddorp The Netherlands
Phone 31-2356-81-300
FAX 31-2356-81-388
OMRON ELECTRONICS LLC
2895 Greenspoint Parkway, Suite 200, Hoffman Estates, IL 60169 U.S.A
Phone 1-847-843-7900
FAX 1-847-843-7787
OMRON ASIA PACIFIC PTE. LTD.
No. 438A Alexandra Road # 05-05/08 (Lobby 2),
Alexandra Technopark, Singapore 119967
Phone 65-6835-3011
FAX 65-6835-2711
OMRON Corporation
Shiokoji Horikawa, Shimogyo-ku, Kyoto 600-8530 JAPAN