Cat. No. V014-E1-1

SYSMAC

C500-DT021/022-V1

Display Terminal Unit

OPERATION MANUAL

OMRON

C500-DT021/022-V1
Display Terminal Unit

Operation Manual

Revised February 1992

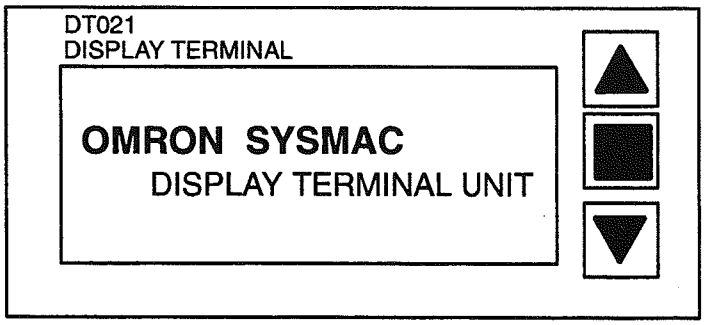

Notice:

OMRON products are manufactured for use according to proper procedures by a qualified operator and only for the purposes described in this manual.

The following conventions are used to indicate and classify warnings in this manual. Always heed the information provided with them.

DANGER! Indicates information that, if not heeded, could result in loss of life or serious injury.

Caution Indicates information that, if not heeded, could result in minor injury or damage to the product.

OMRON Product References

All OMRON products are capitalized in this manual. The word "Unit" is also capitalized when it refers to an OMRON product, regardless of whether or not it appears in the proper name of the product.

The abbreviation "Ch," which appears in some displays and on some OMRON products, often means "word" and is abbreviated "Wd" in documentation in this sense.

The abbreviation "PC" means Programmable Controller and is not used as an abbreviation for anything else.

Visual Aids

The following headings appear in the left column of the manual to help you locate different types of information.

Note Indicates information of particular interest for efficient and convenient operation of the product.

1, 2, 3... Indicates lists of one sort or another, such as procedures, precautions, etc.

© OMRON, 1991

All rights reserved. No part of this publication may be reproduced, stored in a retrieval system, or transmitted, in any form, or by any means, mechanical, electronic, photocopying, recording, or otherwise, without the prior written permission of OMRON.

No patent liability is assumed with respect to the use of the information contained herein. Moreover, because OMRON is constantly striving to improve its high-quality products, the information contained in this manual is subject to change without notice. Every precaution has been taken in the preparation of this manual. Nevertheless, OMRON assumes no responsibility for errors or omissions. Neither is any liability assumed for damages resulting from the use of the information contained in this publication.

TABLE OF CONTENTS

SECTION 1
Introduction 1
1–1 Components and Functions 2
1–2 System Configurations 4

SECTION 2
Installation and Wiring 7
2–1 Mounting the Display Terminal Unit 8
2–2 Cable Construction 8
2–3 Battery Maintenance 13

SECTION 3
Modes and Switch Settings 15
3–1 Operating Modes 16
3–2 DIP Switch Settings 20

SECTION 4
Displaying Text and Graphics 27
4–1 Cursor Assignment Table 28
4–2 Graphic Commands 29
4–3 Text and Graphics in Terminal Mode 30
4–4 Bar Graph Example 33
4–5 Page Read Example 37
4–6 Application Example 39
4–7 Numeric Value Display (Command I) 40
4–8 Bar Graph Display 45
4–9 Registering Characters 55

Appendices 59
A Specifications 59
B Commands 65
C Errors and Troubleshooting 73
D JIS Character Code 81
E ASCII Codes 99
F Standard Models 101

Glossary 103

Index 105

Revision History 107

About this Manual:

This manual describes operation of the C500-DT021/022 Display Terminal Unit. This Unit is an LCD dot matrix monitoring device that may be connected to a host using either serial or parallel interfaces. Data is stored on an EPROM chip or in RAM with battery back-up. This manual is organized as follows:

Section 1 *Nomenclature and Features*, describes the physical components of the Display Terminal Unit. It also diagrams possible system configurations.

Section 2 *Installation and Wiring*, describes mounting the Display Terminal Unit and the wiring required for communication with the host.

Section 3 *Modes and Switch Settings*, describes each of the five operating modes and their DIP switch settings.

Section 4 *Displaying Text and Graphics*, describes the settings and programming required to display data on the Unit's display. Several examples are explained.

Appendixes, a ***Glossary***, and an ***Index*** are also included.

SECTION 1
Introduction

1–1 Components and Functions 2
1–2 System Configurations 4

Introduction

The C500-DT021/022 Display Terminal Unit is a programmable dot matrix LCD display capable of displaying up to 8 lines of 30 characters. The Unit can display text or graphics. It is primarily used as a system monitoring device.

Character sets resident in the Display Terminal Unit include ASCII and JIS (Japanese Industrial Standard). Custom character sets may be programmed in 8 x 8, 8 x 16, and 17 x 16 pixel sizes. The basic character sets can be expanded and compressed horizontally and vertically, providing a total of nine sizes. Characters may be displayed in normal video, inverse video or blinking format. Three backlight colors are available: red, green and orange. In addition to standard character output, up to four bar graphs can be displayed at one time.

1–1 Components and Functions

The following diagrams show the appearance of the Unit.

Front View

The front panel has three membrane keys located to the right of the display. These keys are used to scroll through data blocks.

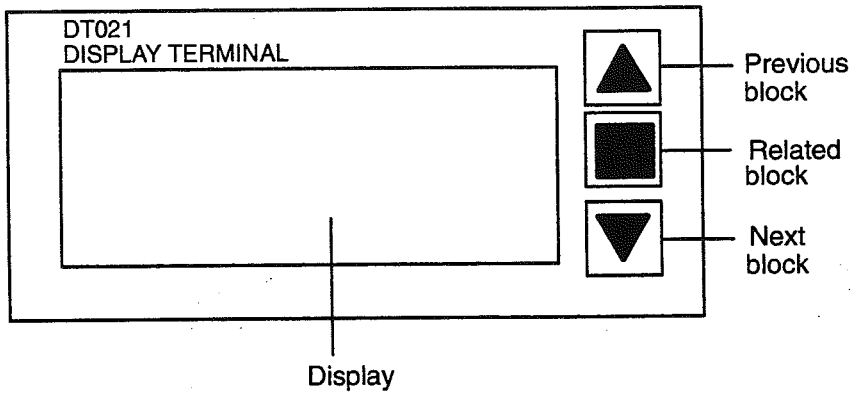

The top and bottom keys scroll through data blocks in ascending or descending order. The previous block key will wrap around to the highest block (199 or 456, depending on the size of memory) after block 0. The next block key will roll over from the highest block to block 0. When pin 11 is ON, the previous and next block keys are operational only when enabled via the Front Panel Command.

Commands may be embedded within data blocks to form links. Pressing the Unit's center key will cause the next block in the chain to be displayed. If the data block currently displayed has no links to other data blocks, then pressing this key will have no effect.

Back View

Terminals for wiring, DIP switches, and the contrast control are located on the back of the Unit.

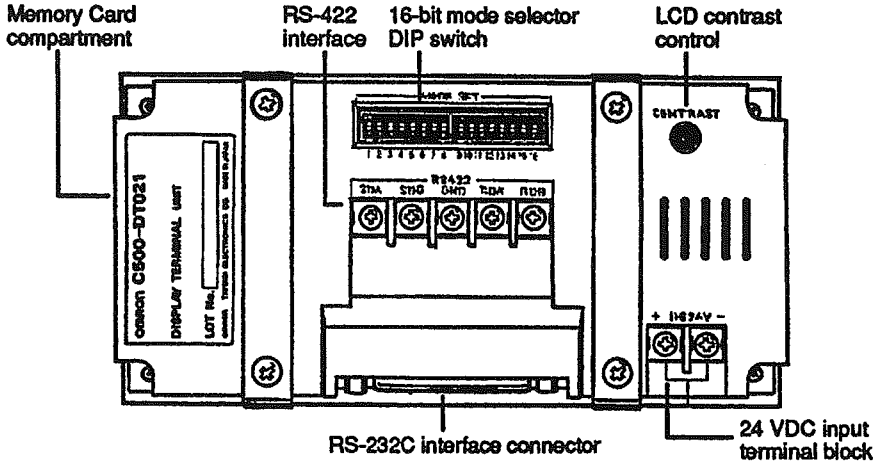

Storage Media

Removable memory cards store the Display Terminal Unit's data. The DT021 has a RAM memory card with battery back-up. The DT022 has a memory card containing a 27256 EPROM. The cards containing RAM or ROM chips are interchangeable.

To mount the memory card in the Display Terminal Unit, follow the steps outlined below. Proceed in reverse order to remove an installed card.

Mounting the Memory Card

1, 2, 3...

1. With the Unit lying display side down on a flat surface, locate the removable panel on the side of the case.
2. With your thumb and index finger, apply pressure on the top and bottom of the removable panel and pull outward. The compartment will open, allowing access to the memory card.

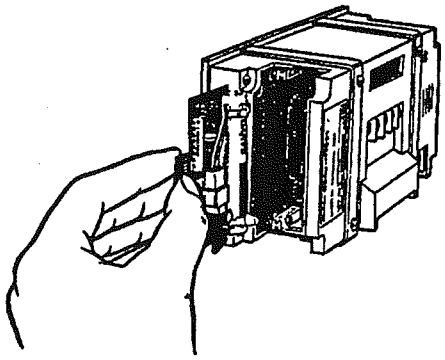

3. Slide the memory card, face-up and connector-side in, along the positioning guides. Slide the card until the memory card has firmly connected with the Display Terminal Unit's internal connection.
4. Replace the removable panel.

To program a DT021, connect the Unit to a personal computer via the RS-232C, RS-422, or 11-bit parallel interface. To program a DT022, remove the memory card from the compartment and use a PROM Writer to write data to the ROM.

Both models of memory cards are interchangeable with both models of the Display Terminal Unit. Replacements and spares are available from your OMRON dealer. If the Display Terminal Unit requires factory servicing, ship it with a memory card installed.

1–2 System Configurations

Communication with the Display Terminal Unit is via RS-232C, RS-422, or 24 VDC parallel interfaces. If RS-422 or parallel communication is used, up to 16 Units may be accessed individually by the host device.

24-VDC Parallel Interface

The following diagram shows multiple Display Terminal Units connected to a C500 PC using the parallel interface.

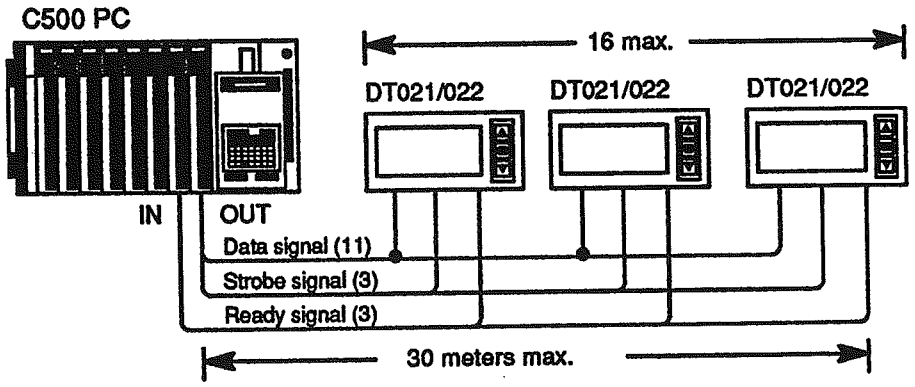

RS-422 Interface

The following diagram shows multiple Display Terminal Units connected to an AT-compatible personal computer using the RS-422 interface.

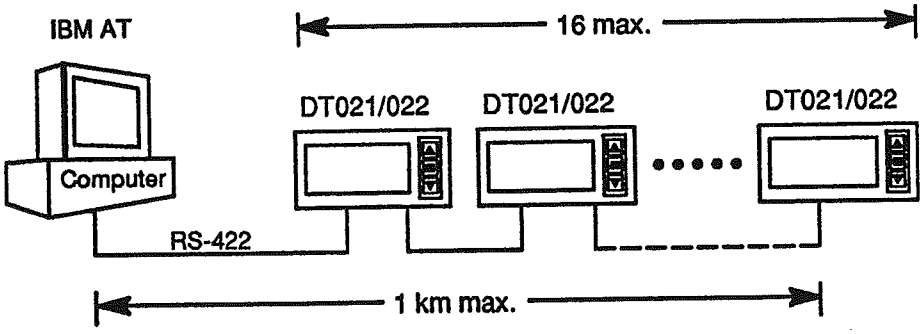

RS-232C Interface

The following diagram shows the Display Terminal Unit connected to a C500 PC. An ASCII Unit is mounted to the Backplane of the PC.

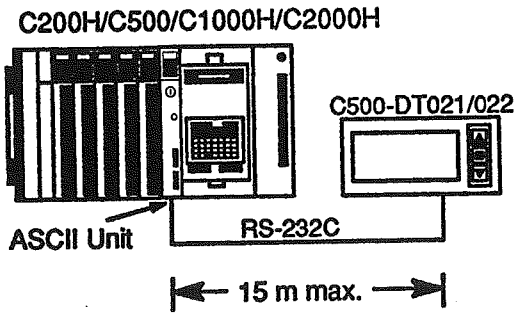

Similarly, the RS-232C interface may be used to connect the Display Terminal Unit to an IBM AT-compatible personal computer.

IBM AT-compatible

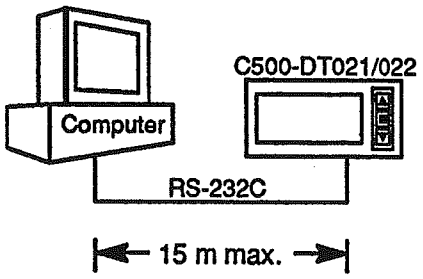

SECTION 2
Installation and Wiring

This section describes how to mount the Display Terminal Unit onto an instrument rack. It also describes the cables used to communicate with a host in each of the three modes: 24-VDC parallel, RS-232C serial, and RS-422 serial.

2–1 Mounting the Display Terminal Unit 8
2–2 Cable Construction 8
2–3 Battery Maintenance 13

2–1 Mounting the Display Terminal Unit

1, 2, 3... 1. To accommodate the Display Terminal Unit, cut an opening in the mounting panel to the following dimensions:

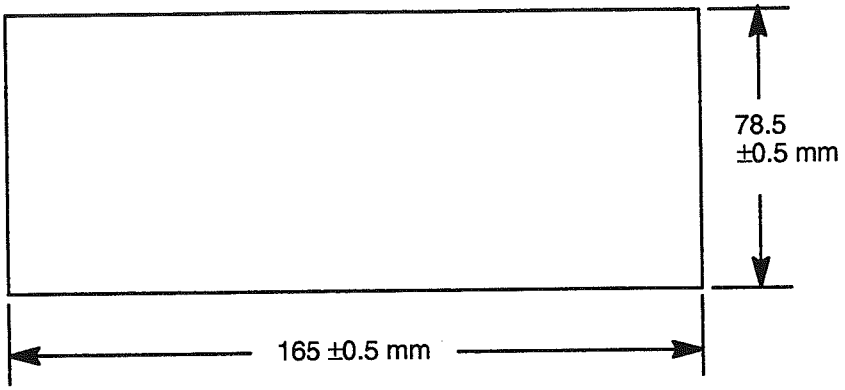

2. Remove the four screws from the mounting brackets on the back panel of the Display Terminal Unit. Remove the mounting brackets.

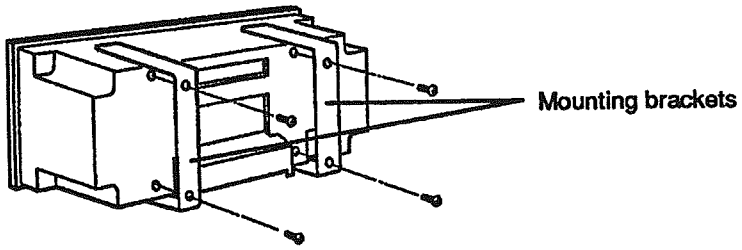

3. Insert the Display Terminal Unit into the mounting panel from the front.

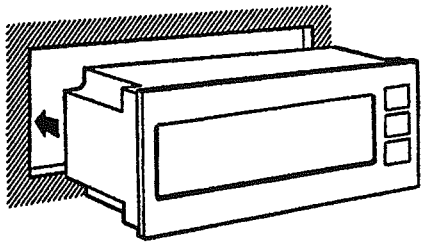

4. Attach the mounting brackets to the Unit with the four removed earlier.

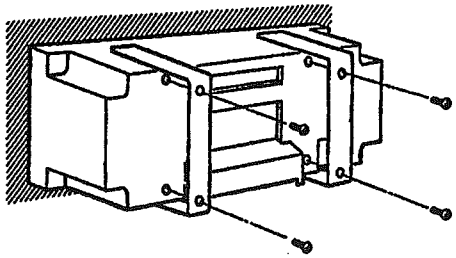

2–2 Cable Construction

The power supply and signal cables connect to the back panel of the Display Terminal Unit.

Power Supply

To supply power to the Display Terminal Unit, connect the 24-VDC terminal on the back panel of the Unit to a 24-VDC source using the connector supplied.

24-VDC Parallel Mode

One cable can be used for both 24-VDC parallel and RS-232C serial communication modes. The following table describes pin assignments for the cable when the Unit is operating in parallel mode:

Pin No.	Signal name	Direction	Remarks
1	D.STB	Input	—
2 to 7	—	—	—
8	DATA 0	Input	Page data 0
9	DATA 1	Input	Page data 1
10	DATA 2	Input	Page data 2
11	DATA 3	Input	Page data 3
12	DATA 4	Input	Page data 4
13	DATA 5	Input	Page data 5
14	DATA 6	Input	Page data 6
15	DATA 7	Input	Page data 7
16	D. STB	Input	Numeric value input strobe
17	READY	Output	Unit status
18	GND (negative)	—	—
19	GND (negative)		
20	DATA 8	Input	Page data 8/digit designation
21	DATA 9	Input	Page data 9/digit designation
22	DATA 10	Input	Page data 10/digit designation
23	PAGE-INC	Input	Page auto-increment
24	24 VDC (positive)	—	—
25	24 VDC (positive)	—	—

RS-232C Serial Mode

The Display Terminal Unit uses the same cable for both 24-VDC parallel and RS-232C serial communication. The communication mode is selected using the DIP switch as described in *3–2 DIP Switch Settings*. The following diagram shows pin assignments when the cable is connected to the DB25 serial interface of a personal computer:

Connections to a Personal Computer in Serial RS-232C Mode

Personal computer connector pin no.		Display Terminal Unit connector pin no.
1		1
2 (SD)		2 (SD)
3 (RD)		3 (RD)
4 (RS)		4 (RS)
5 (CS)		5 (CS)
6		6
7 (SG)		7 (SG)
8		8
9		9
10		10
11		11
12		12
13		13
14		14
15		15
16		16
17		17
18		18
19		19
20		20
21		21
22		22
23		23
24		24
25		25

RS-422 Serial Mode

When the Display Terminal Unit is set to communicate with its host in this mode, up to 16 Units may be individually addressed. The following diagram shows pin assignments for a cable between the Unit's back panel and a personal computer.

Pin No.	Signal name	Direction	Remarks
1	—	—	Send data
2	SD	Output	Receive data
3	RD	Input	Request to send
4	RS	Output	Clear to send
5	CS	Input	
6	—	—	Signal ground
7	SG	—	—
8 to 25	—	—	—

Connecting the RS-422 Cabling

The following diagram illustrates how the Display Terminal Unit connects to a personal computer.

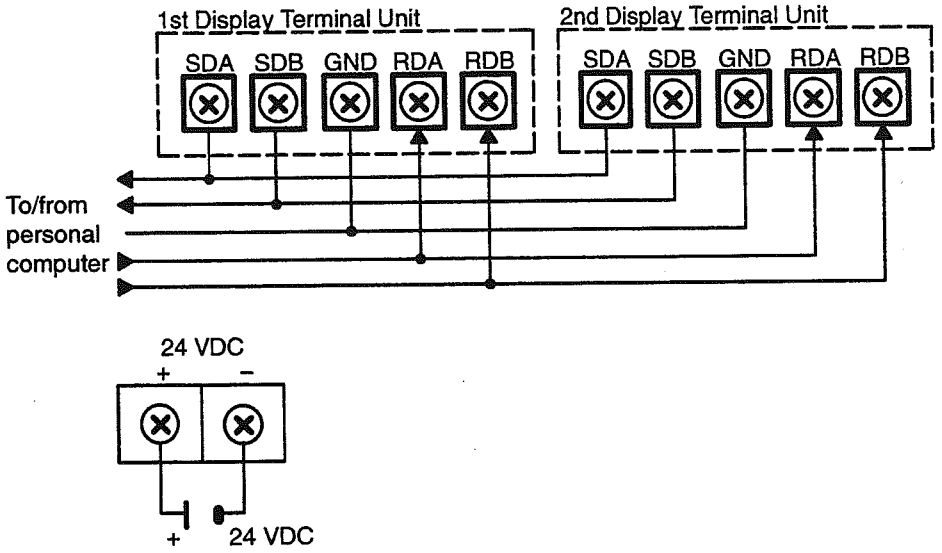

2–3 Battery Maintenance

The RAM card for the DT021 Display Terminal Unit is provided with a backup battery. Battery life is approximately five years when the Unit is stored at an ambient temperature of 25%C. One spare battery for the Unit should be kept on hand to ensure continuous operation of the Unit.

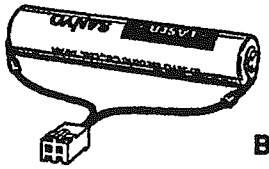

Battery

As the battery nears expiration, the message "REPLACE BATTERY" will be displayed when the Display Terminal Unit is turned ON. The battery should be replaced within one month after this message first appears.

Note Complete this procedure within three minutes or RAM data will be lost.

Battery Replacement

1, 2, 3... 2. Turn OFF the power to the Unit.

2. Remove the side panel as shown below by pressing the top and bottom panels with your thumb and index finger.

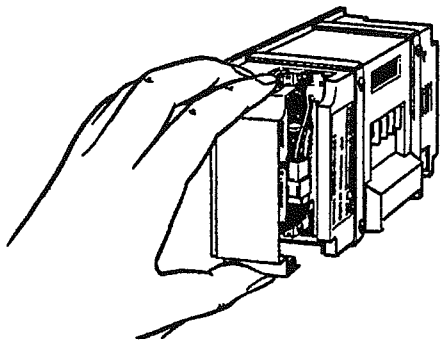

3. Pull out the RAM Card.
4. Cut the bands holding the battery. Replace the battery.

Note Install the new battery within three minutes of removing the old battery, or RAM data will be lost.

SECTION 3
Modes and Switch Settings

This section explains the five operating modes of the Display Terminal Unit. These modes are Page Read, Terminal, Dynamic Scan, Read/Write, and Self-diagnosis. In addition to the five operating modes, there are three communication modes: parallel, serial RS-232C, and RS-422. Each of the operating modes, except one, utilizes only one of the three communication modes. Depending on the application, terminal mode can utilize all three. The operating modes and communication parameters are set with the DIP switch on the back panel of the Unit. The second part of this section explains the DIP switch settings for all the possible operating mode-communication mode combinations.

3–1 Operating Modes 16
3–1–1 Page Read Mode 16
3–1–2 Terminal Mode 18
3–1–3 Dynamic Scan Mode 18
3–1–4 Read/Write Mode 19
3–1–5 Page Read and Read/Write Mode 19
3–1–6 Self-diagnosis Mode 19
3–2 DIP Switch Settings 20
3–2–1 Page Read Mode 20
3–2–2 Terminal Mode, Parallel 20
3–2–3 Terminal Mode, Serial RS-232C 21
3–2–4 Terminal Mode, Serial RS-422 22
3–2–5 Dynamic Scan Mode 23
3–2–6 Read/Write Mode (RS-232C) 23
3–2–7 Page Read and Read/Write Mode (RS-232C and Parallel) 24
3–2–8 Self-diagnosis Mode 25

3–1 Operating Modes

The following table lists the five operating modes of the Display Terminal Unit, explains their functions, and indicates which communication modes are used with each operating mode.

Operating mode	Function	Communication mode		
		Parallel	RS-232C	RS-422
Page read	Sends and reads page data. Specifies rows and columns on read page to display numeric data.	Yes (11 pins)	No	No
Terminal	Reads page data registered on RAM/ROM card. Displays alphanumeric characters for ASCII Unit or personal computer. Displays numeric data.	Yes (8 pins)	Yes	Yes
Dynamic scan	Reads pages in units of 24 blocks.	Yes	No	No
Read/Write	Creates and registers messages.	No	Yes	No
Self-diagnosis	Checks Display Terminal Unit.	No	Yes	No
Page Read and Read/Write	Combines the functions of the page read mode and the read/write mode.	Yes	Yes	No

Both the operation mode and the communication mode are set with DIP switches on the back panel of the Unit. These DIP switches are discussed in *3-2 DIP Switch Settings.*

3–1–1 Page Read Mode

This mode can be used only with the parallel interface. A page of a message is selected using an 11-bit data strobe.

In this mode, the ESC command cannot be input from an external source. Therefore, the ESC command must be included in the page data, permitting commands such as overlap display, enlarge, and alternate to be used.

I/O Timing

Example 1: Reading a Page of Data

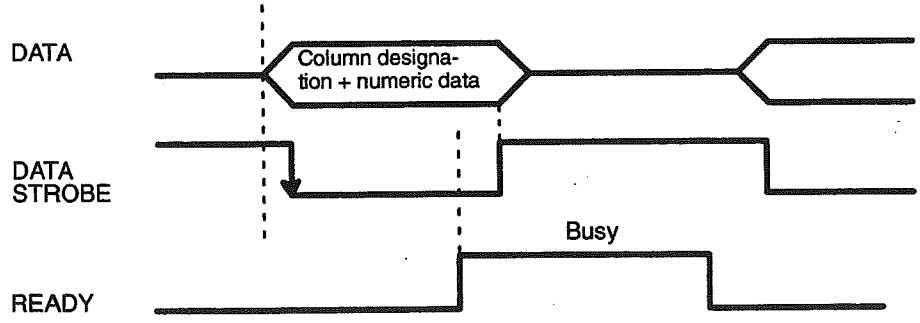

The Data Strobe signal goes high after data transmission is complete. Do not clear the Data Strobe signal after the READY signal has gone high.

The following timing chart shows how a numeric value display control command should be set on the screen to input numeric values from an external source.

Example 2: Displaying and inputting numeric values

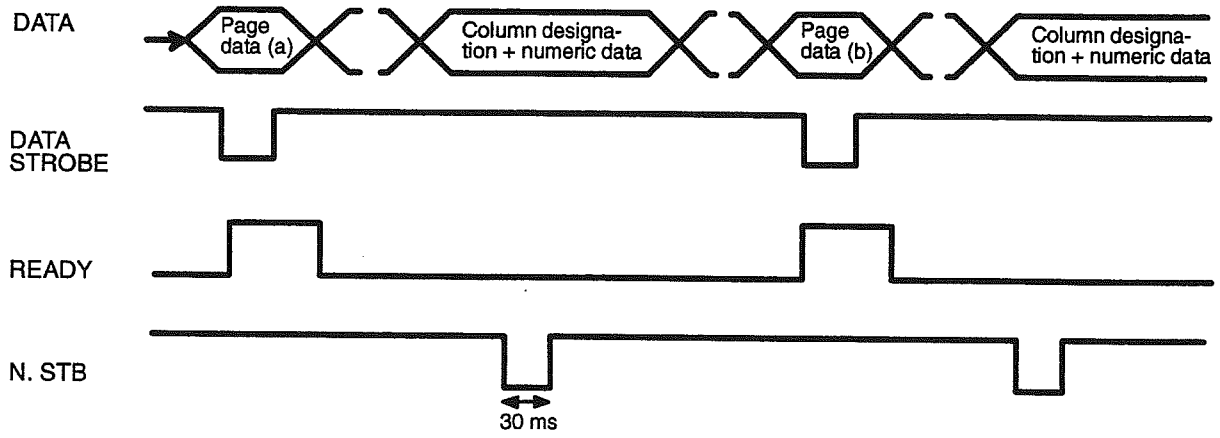

Because numeric data must be displayed at high speeds, the READY and BUSY signals are not utilized.

The preceding operation is performed as follows:

DIP Switch Pin 11: OFF

1. Page (a) (any page) is read. At this time, the first display position command of numeric data must be set in (a).
2. Next, numeric data (consisting of 2 columns), 3 pins of Digit designations (data lines 8, 9, and 10), and the N.STB signals are turned ON for 30 ms. The Display Terminal Unit then cyclically (at intervals of approximately 10 to 20 ms) reads the numeric data, if N.STB is high, and displays the data in the two specified columns. (Up to 8 columns and 16 characters can be specified.)

Displaying Data in Page Read Mode

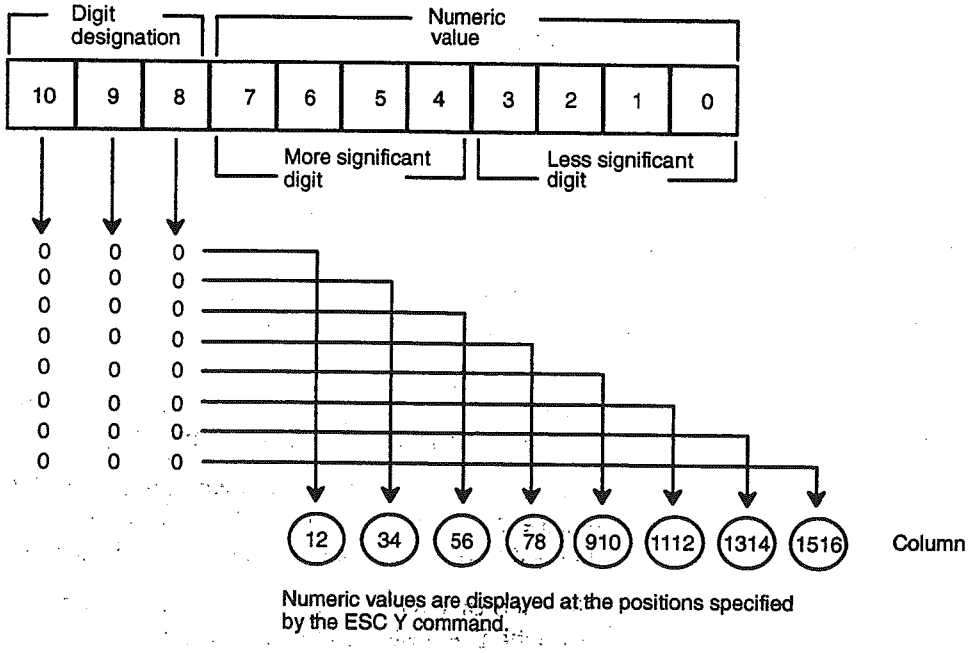

Numeric values are displayed at the positions specified by the ESC Y command.

DIP Switch Pin 11: ON

Numeric Designations

A maximum of 8 digits can be displayed. The number is input from the host using a Digit designation and a numeric data as shown below. The display will appear when the least significant digit (LSD) has been designated (i.e., when Data 8, 9, and 10 are all zero). All data is buffered until the LSD has been received.

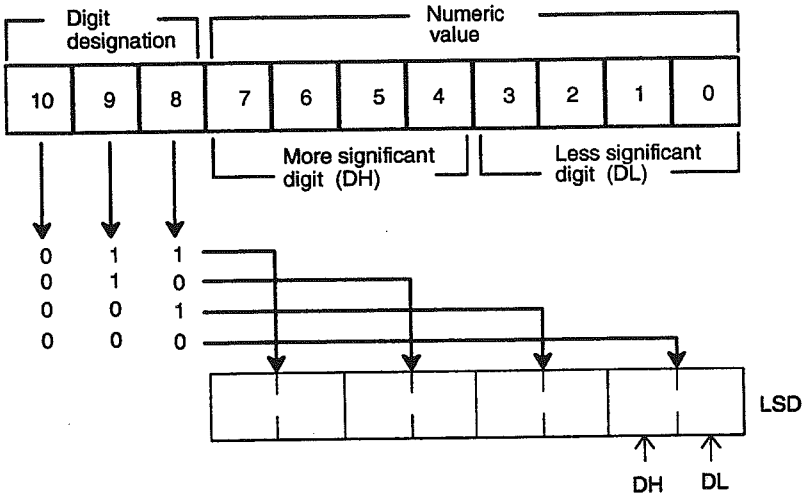

A stable signal is required for approximately 20 ms to read two digits.

Note: Numeric data can only be displayed in 1/2 width and 1/4 width; full and double width cannot be displayed.

3–1–2 Terminal Mode

This operating mode can be used with all three communication modes. In this mode, characters and bar graphs can be displayed by transferring control command codes (e.g., ESC) and display data to the Display Terminal Unit from an external source. It is also possible to read and display page data stored on the RAM/ROM card.

Since high-speed processing is required in this mode, the READY signal will go high before the internal buffer fills (except when the RS-422 interface is used). Therefore, input data is accepted sequentially while the READY signal is high.

3–1–3 Dynamic Scan Mode

This operating mode is used to display up to 24 pages of data cyclically on the Display Terminal Unit. This mode can be used with the parallel interface only.

Eleven data lines (data 0 to 10) are used to generate an 8 x 3 matrix. One of 24 pages is displayed cyclically, depending on its status.

Data lines 0 through 7 are input when any one of data lines 8, 9, or 10 is high and the page corresponding to the input data is displayed. Page data is alternately displayed at 3-second intervals until all lines go low.

While the Unit is in this mode, the first address of a page can be changed using the DIP switch on the back panel.

Dynamic Scan Mode Display Matrix

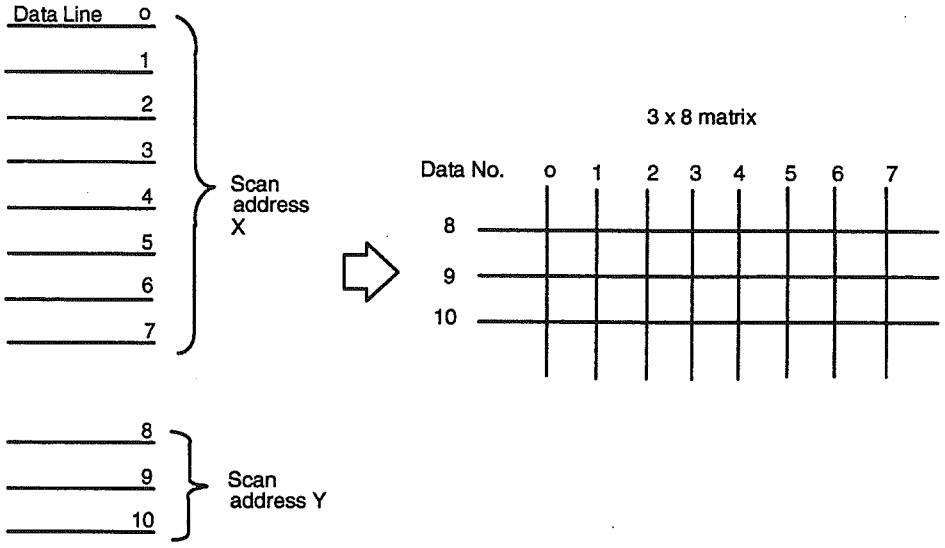

3–1–4 Read/Write Mode

This mode is used to both read and write messages and user-defined characters from a personal computer to the Display Terminal Unit. The read/write mode can be used only with the RS-232C serial interface.

3–1–5 Page Read and Read/Write Mode

The Page Read and Read/Write Mode enables application of the functions of the page read mode and the read/write mode without switching modes, i.e., it supports the functions of both of these modes.

3–1–6 Self-diagnosis Mode

This mode is used to check the operations of the Display Terminal Unit.

3–2 DIP Switch Settings

The Display Terminal Unit can operate in any of the modes described in the previous section. These modes are selected with the 16-pin DIP switch on the back panel of the Unit. Note that only one mode can be specified at a time, and the mode selected becomes valid when the Unit is turned ON.

3–2–1 Page Read Mode

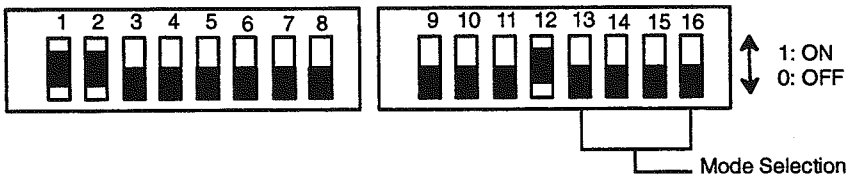

For pins 1, 2, 11 and 12, refer to the tables below. All other pins should be set as shown.

Setting	Pin 1: Data input code	Pin 2: Strobe
0	BCD code	Enabled
1	HEX code	Disabled

Setting	Pin 11: Numeric display command	Pin 12: Character size
0	Command I compatibility	Full-width/ 1/2 width
1	Command II compatibility	1/4 width

3–2–2 Terminal Mode, Parallel

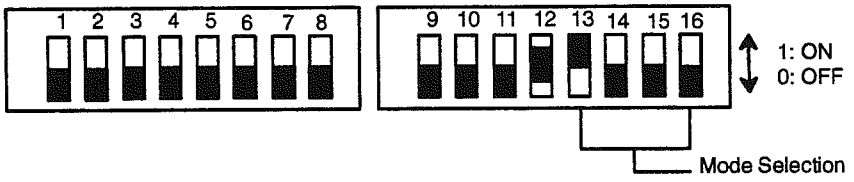

For pins 11 and 12, refer to the table below.
All other pins should be set as shown.

Setting	Pin 11: Numeric display command	Pin 12: Character size
0	Command I compatibility	Full-width/ 1/2 width
1	Command II compatibility	1/4 width

3–2–3 Terminal Mode, Serial RS-232C

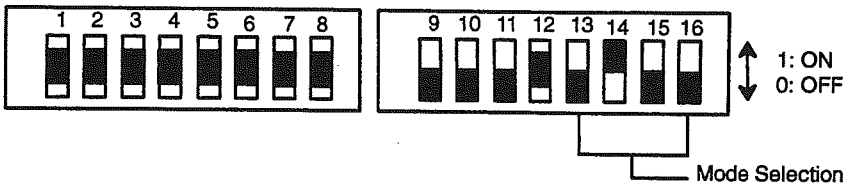

For pins 1 through 8, 11 and 12, refer to the tables below.
All other pins should be set as shown.

Setting		Baud rate
Pin 1	Pin 2	
0	0	1200 baud
1	0	2400 baud
0	1	4800 baud
1	1	9600 baud

Setting	Pin 3: Data length
0	Eight bits
1	Seven bits

Setting		Parity
Pin 4	Pin 5	
0/1	0	No Parity
0	1	Even Parity
1	1	Odd Parity

Setting	Pin 6: Stop bit
0	One stop bit
1	Two stop bits

Setting		Transfer control
Pin 7	Pin 8	
0/1	0	None
0	1	XON, XOFF
1	1	Control Signal

Setting	Pin 11: Numeric display command	Pin 12: Character size
0	Command I compatibility	Full-Width/ 1/2 width
1	Command II compatibility	1/4 width

3–2–4 Terminal Mode, Serial RS-422

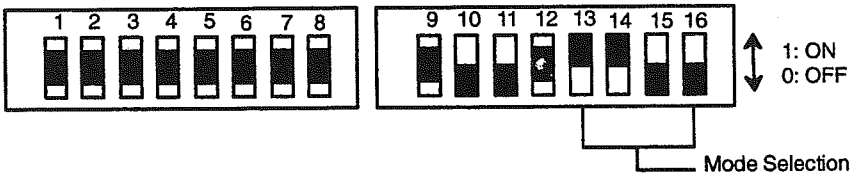

For pins 1 through 9, 11 and 12, refer to the tables below.
All other pins should be set as shown.

Setting				Polling address
Pin 1	Pin 2	Pin 3	Pin 4	
0	0	0	0	00
1	0	0	0	01
0	1	0	0	02
1	1	0	0	03
0	0	1	0	04
1	0	1	0	05
0	1	1	0	06
1	1	1	0	07
0	0	0	1	08
1	0	0	1	09
0	1	0	1	10
1	1	0	1	11
0	0	1	1	12
1	0	1	1	13
0	1	1	1	14
1	1	1	1	15

Setting	Pin 5: Baud rate	Pin 6: Data length
0	2,400 baud	Eight bits
1	4,800 baud	Seven bits

Setting		Parity
Pin 7	Pin 8	
0/1	0	No parity
0	1	Even parity
1	1	Odd parity

Setting	Pin 9: Stop bit
0	One stop bit
1	Two stop bits

Setting	Pin 11: Numeric display command	Pin 12: Character size
0	Command I compatibility	Full-width/ 1/2 width
1	Command II compatibility	1/4 width

3–2–5 Dynamic Scan Mode

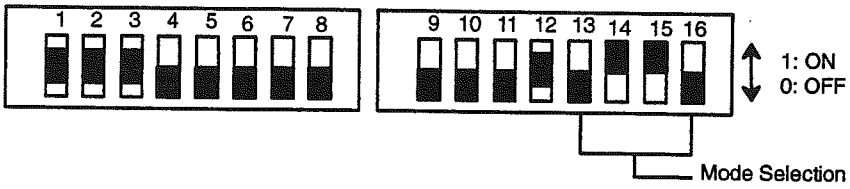

For pins 1, 2, 3, and 12, refer to the tables below.
All other pins should be set as shown.

Setting			Page range
Pin 1	Pin 2	Pin 3	
0	0	0	0 to 23
1	0	0	25 to 48
0	1	0	50 to 73
1	1	0	75 to 98
0	0	1	100 to 123
1	0	1	125 to 148
0	1	1	150 to 173
1	1	1	175 to 198

Setting	Pin 12: Character size
0	Full-width/ 1/2 width
1	1/4 width

3–2–6 Read/Write Mode (RS-232C)

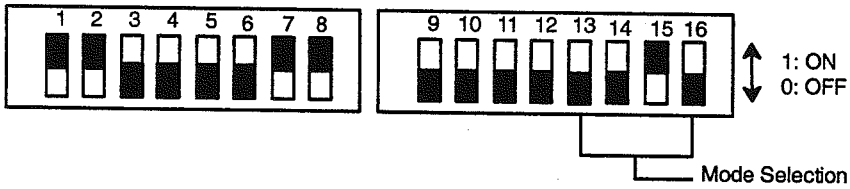

Setting		Baud rate
Pin 1	Pin 2	
1	1	9,600 baud

Setting	Pin 3: Data length
0	Eight bits
1	Seven bits

Setting		Parity
Pin 4	Pin 5	
0	0	No Parity
0	1	Even Parity
1	1	Odd Parity

Setting	Pin 6: Stop bit
0	One stop bit
1	Two stop bit

Setting		Transfer control
Pin 7	Pin 8	
0/1	0	None
0	1	XON, XOFF
1	1	Control Signal

Setting	Pin 12: Font
0	Full-width/ 1/2 width
1	1/4 width

3–2–7 Page Read and Read/Write Mode (RS-232C and Parallel)

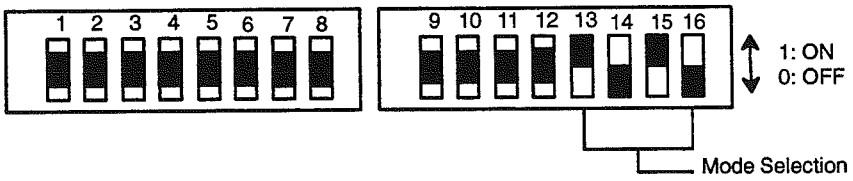

For pins 1 through 4, refer to the tables below.
All other pins should be set as shown.

Setting		Baud rate
Pin 1	Pin 2	
0	0	1200 baud
1	0	2400 baud
0	1	4800 baud
1	1	9600 baud

Setting	Pin 3: Data length
0	Eight bits
1	Seven bits

Setting		Parity
Pin 4	Pin 5	
0/1	0	No Parity
0	1	Even Parity
1	1	Odd Parity

Setting	Pin 6: Stop bit
0	One stop bit
1	Two stop bits

Setting		Transfer control
Pin 7	Pin 8	
0/1	0	None
0	1	XON, XOFF
1	1	Control Signal

Setting	Pin 9: Data input code	Pin 10: Strobe
0	BCD code	Strobe on
1	HEX code	Strobe off

Setting	Pin 11: Numeric display command	Pin 12: Character size
0	Command I compatibility	Full-Width/ 1/2 width
1	Command II compatibility	1/4 width

3–2–8 Self-diagnosis Mode

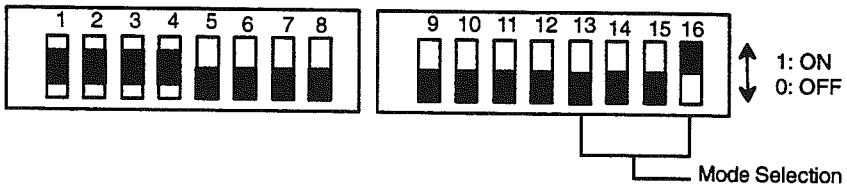

For pins 1 through 4, refer to the tables below.
All other pins should be set as shown.

Setting				Mode	Function
Pin 1	Pin 2	Pin 3	Pin 4		
0	0	0	0	General diagnosis	Executes self-diagnosis steps 1 to 7 in sequence.
1	0	0	0	Memory check	Checks internal memory (RAM or ROM).
0	1	0	0	Display check	Checks all LCD dots.
1	1	0	0	Connector check	Displays signal status of I/O connector.
0	0	1	0	Serial check	Loop-back test for RS-232C/RS-422
1	0	1	0	Mode switch check	Displays status of mode selector DIP switch.
0	1	1	0	Character display	Displays characters other than user-defined characters.
1	1	1	0	Message display	Displays message screens alternately.
—	—	—	—	Diagnosis call mode	For pre-shipping factory check

SECTION 4
Displaying Text and Graphics

This section explains the format for the text and graphic commands which register and display text and graphics on the Display Terminal Unit. Application examples in the different operating and communication modes, including BASIC programs for implementing the graphic commands on a personal computer or ASCII Unit and ladder diagram programs for the PC, are presented.

4–1 Cursor Assignment Table 28
4–2 Graphic Commands 29
4–3 Text and Graphics in Terminal Mode 30
4–4 Bar Graph Example 33
4–5 Page Read Example 37
4–6 Application Example 39
4–7 Numeric Value Display (Command I) 40
4–8 Bar Graph Display 45
4–9 Registering Characters 55

4–1 Cursor Assignment Table

To display data such as numeric values, characters, and bar graphs on the Display Terminal Unit using the PC or a personal computer, it is necessary to specify the display position of the data. The following table illustrates the correspondence between data positions and their respective hexadecimal codes. This table is a map of the Display Terminal Unit display. Listed along the top of the table are the column positions and their hexadecimal codes. Listed along the left side of the table are the row positions and their hexadecimal codes. There are two character size modes, full-width/half-width and 1/4 width. These are listed along the bottom-left of the table. Which of the two settings is chosen will determine the number of characters that can be displayed. Both modes display characters in 15 columns, but full-width mode divides the screen into four rows while 1/4 width mode divides the screen into eight rows.

Map of Display Terminal Unit Screen

		Position	1,2	3,4	5,6	7,8	9,10	11,12	13,14	15,16	17,18	19,20	21,22	23,24	25,26	27,28	29,30
		HEX Code	20,21	22,23	24,25	26,27	28,29	2A,2B	2C,2D	2E,2F	30,31	32,33	34,35	36,37	38,39	3A,3B	3C,3D
1	20	1 / 2	20 / 21														
2	21	3 / 4	22 / 23														
3	22	5 / 6	24 / 25														
4	23	7 / 8	26 / 27														
Position	Code	Position	Code														
Full-width/ half-width		1/4 width															
Row																	

The following table shows the relationship between code and input keys.

Position	1	2	3	4	5	6	7	8	9	10	11	12	13	14	15	16	17	18	19	20	21	22	23	24	25	26	27	28	29	30
HEX code	20	21	22	23	24	25	26	27	28	29	2A	2B	2C	2D	2E	2F	30	31	32	33	34	35	36	37	38	39	3A	3B	3C	3D
Key	␣	!	"	#	$	%	&	'	(	)	*	+	,	-	.	/	0	1	2	3	4	5	6	7	8	9	:	;	<	=

4–2 Graphic Commands

The following Graphic Commands control how and where characters are displayed on the Display Terminal Unit screen.

Cursor position

ESC	Y	Row	Col
1B	59	(row)	(column)

Auto-cursor control

ESC	X	Row	Col
1B	58	(row)	(column)

Bar graph reference point setting

ESC	&	l	m	n
1B	26	(column)	(width)	(No. of dots)

l: Specifies column position in a bar graph for each page

Bar graph display

ESC	'	m	n1	n2	n3
1B	27		Real dot data		

m: Specifies the line on which the data is displayed

Calculation display

ESC	%	m
1B	25	

m: Specifies the column in which data is displayed as a percentage

Numeric value display position specification

ESC	M	ROW	COL
1B	4D	(row)	(column)

4–3 Text and Graphics in Terminal Mode

The appearance of text and graphics on the Display Terminal Unit can be controlled in Terminal mode from a PC, an ASCII Unit, or a personal computer.

Parallel Interface

Using the parallel interface, graphic commands can be directed to the Display Terminal Unit (connected to a PC I/O device) by the PC program.

Serial RS-232 Interface

Using the RS-232C serial interface, the display of text and graphics on the Display Terminal Unit can be controlled from the ASCII Unit or a personal computer.

RS-422 Interface

Using the RS-422 interface, the display of text and graphics on the Display Terminal Unit can be controlled from a personal computer only.

In terminal mode, the generation and display of text and graphics can be controlled by the PC program, a BASIC program running on the ASCII Unit, or a basic program running on a personal computer.

In the following example applications, both PC program and BASIC program examples are discussed together with the description of the graphic command formats.

Message Registration Command

The message registration command, ESC Im D1 - D128, registers messages in the message user RAM of the Display Terminal Unit; up to 200 pages of messages can be registered on a single RAM card. The parameter "m" indicates the page number of the screen to be registered and must be a 3-digit numeral. To register a message, use the following format:

1. ESC I (m) : (m) is the page number.
2. ESC Y (row) (col) : (row) (col) specifies the location of the first character on the page.
3. ESC W (n) : (n) specifies the character size.
4. The actual text of the message.
5. The characters "PF" which signify the end of the message.

The following graphic commands are illustrated in tabular form. The top row of the tables indicates the command data position in memory. The middle row is the actual graphic command. The bottom row is the HEX code equivalent of the graphic command and its associated data.

Message Registration Example

Purpose: To register the following message on page 199 of the RAM card.

P	R	O	D	U	C	T								
		C	O	M	P	L	E	T	E					
			T	E	L	(	0	5	5	9	)	7	7	-
1	7	0	0											

Graphic Command

The following tables illustrate the graphic commands to register the above message.

					D1	D2	D3	D4	D5	D6	D7	D8	D9	D10	D11
ESC	I	1	9	9	ESC	Y	!	!	ESC	W	3	P		R	
1B	49	31	39	39	1B	59	21	21	1B	57	33	82	6F	82	71

Registers message on page 199.

Specifies position where "PRODUCT" is written.

Specifies character size of "PRODUCT".

D12	D13	D14	D15	D16	D17	D18	D19	D20	D21	D22	D23	D24	D25	D26	D27
O		D		U		C		T		ESC	Y	"	$	ESC	W
82	6E	82	63	82	74	82	62	82	73	1B	59	22	24	1B	57

Inputs full-width characters in Shift JIS code

Specifies position where "COMPLETE" is written.

Specifies size of characters "COMPLETE"

D28	D29	D30	D31	D32	D33	D34	D35	D36	D37	D38	D39	D40	D41	D42
O	C		O		M		P		L		E		T	
30	82	62	82	6E	82	6C	82	6F	82	6B	82	64	82	73

Inputs full-width characters in Shift JIS code.

D43	D44	D45	D46	D47	D48	D49	D50	D51	D52	D53	D54	D55	D56	D57	D58
E		ESC	Y	#	&	T	E	L	SPACE	(	0	5	5	9	)
82	64	1B	59	23	26	54	45	4C	20	28	30	35	35	39	29

Specifies position where "TEL" is written.

Inputs half-width characters in ASCII code.

D59	D60	D61	D62	D63	D64	D65	D66	D67 to D128
SPACE	7	7	..	1	7	0	0	PF
20	37	37	2D	31	37	30	30	FF

Fills data D67 to D128 with FF.

DIP Switch Setting

In order for the Display Terminal Unit to communicate with a personal computer, the operating mode and communication parameters should be set as follows:

DIP Switch Settings

Character Size:	Full/half-width
Stop bits:	1
Data length:	8 bits
Transfer:	Control signal
Parity:	None
Baud rate:	4,800 bps

DIP switch settings for Terminal mode using serial RS-232C interface

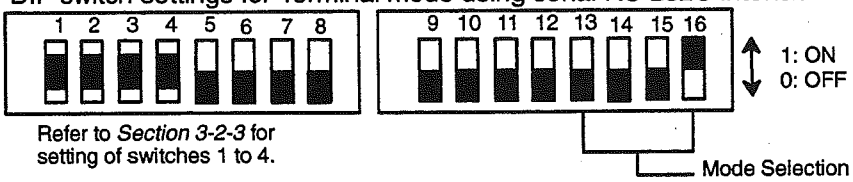

DIP switch settings for Terminal mode using RS-422 interface

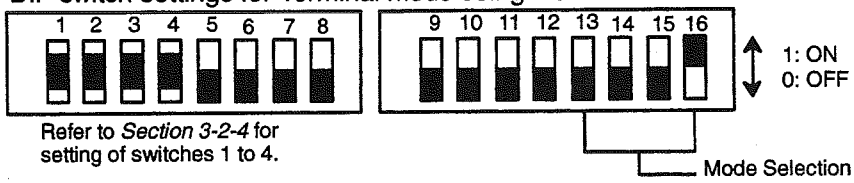

BASIC Program

The following BASIC program executes the graphic commands illustrated on the previous pages.

```
10  OPEN"COM1:N,8,1,,,"AS#2
20  A$=CHR$(&H1B)                          Specifies ESC as A$.
30  PRINT #2,A$ + "I" + "199"]             Registers data on page 199.
40  PRINT #2,A$ + "Y" + "!" + "!"]         Specifies position of
                                           "PRODUCT".
50  PRINT #2,A$ + "W3";]                   Specifies character size.
60  PRINT #2, CHR$(&H82) + CHR$(&H6F) + CHR$(&H82) +
    CHR$(H71) +CHR&(H82) + CHR$(&H6E) + CHR$(&H82) +
    CHR$(&H63) +CHR$(&H82) + CHR$(&H74) + CHR$(&H82) +
    CHR$(&H62) +CHR$(&H82) + CHR$(&H73);
70  PRINT #2,A$ + "Y" + CHR$(&H22) + "$']  Specifies position
                                           of "COMPLETE".
80  PRINT #2,A$ + "W0"]                    Specifies character size.
90  PRINT #2, CHR$(&H82) + CHR$(&H62) + CHR$(&H82) +
    CHR$(&H6E) +CHR$(&H82) + CHR$(&H6C) + CHR$(&H82) +
    CHR$(&H6F) + CHR$(&H82) +CHR$(&H6B) + CHR$(&H82) +
    CHR$(&H64) + CHR$(&H82) + CHR$(&H73) +CHR$(&H82) +
    CHR&(&H64);
100 PRINT #2,A$ + "Y" + "#" + "&"]         Specifies position of "TEL
                                           (0559)...
110 PRINT #2,"TEL (0559)77-1700"]Displays "TEL
                                           (0559)77-1700".
130 PRINT #2,CHR$(&HFF)]                   Ends input of message.
140 PRINT #2,"0000000000000..."            Fills the remaining memory
                                           with 0s.
```

4–4 Bar Graph Example

To display a message created and registered with graphic commands or a BASIC program as illustrated in the previous example, the Display Terminal Unit must be connected to a PC and special code must be incorporated into the PC program. The DIP switches must be reset and a ladder diagram program must be prepared.

DIP Switch Setting

Set the DIP switch so that alphanumeric characters are displayed in full-width/half-width.

DIP switch settings for Terminal mode using the parallel interface

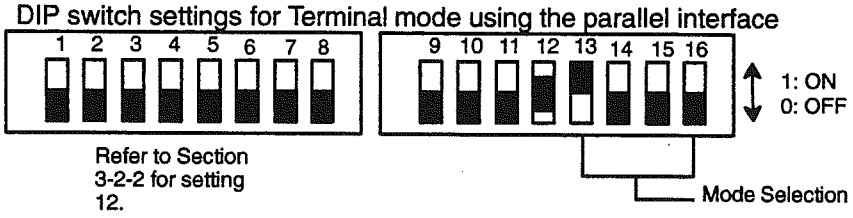

I/O Timing

An 8-bit command code, consisting of DATA lines 0 through 7, is output. DATA lines 8 through 10 are not used. The command code is output as illustrated in the following timing chart:

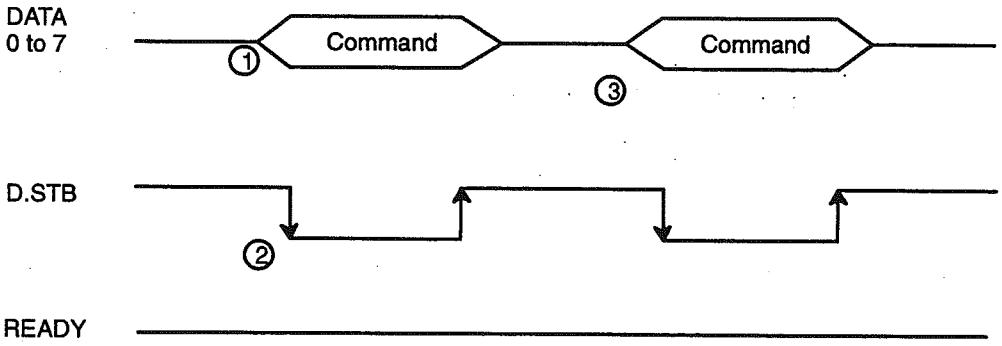

Execution Sequence

1. READY status is checked and the command code is output.
2. The D.STB bit is turned ON after the command has been output.
3. The next command code is output following steps (1) and (2).

Note The READY signal goes high before the internal buffer is full. Therefore, while the READY signal is high, commands and data are accepted sequentially.

Graphic Command Data Storage Area

With the following data and the page registration command, the contents of DM 405 through DM 523 are registered on page 199. To read the registered pages again, use the Page Read command ESC P 199.

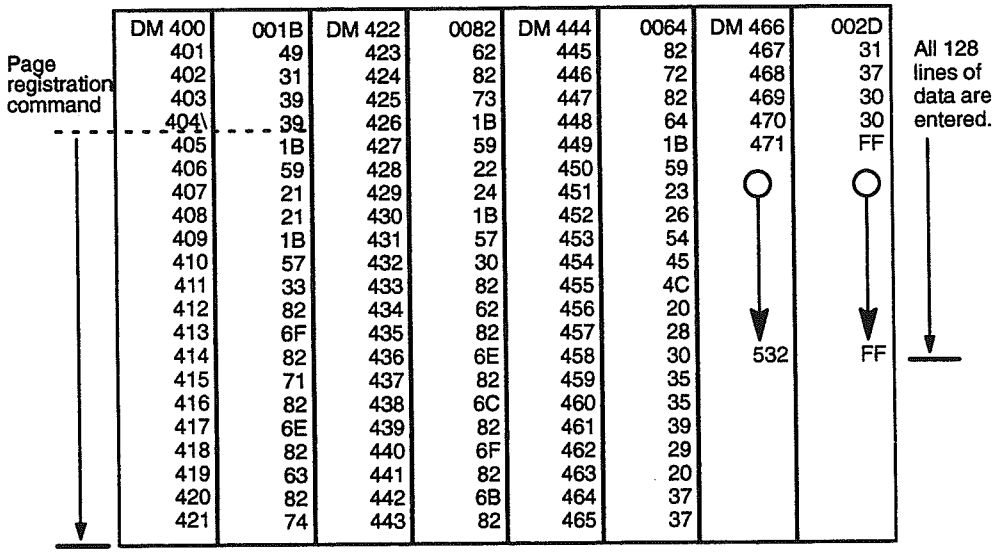

PC Program

The following program example uses the C200H PC and the High-density and Multiplex I/O Unit configuration.

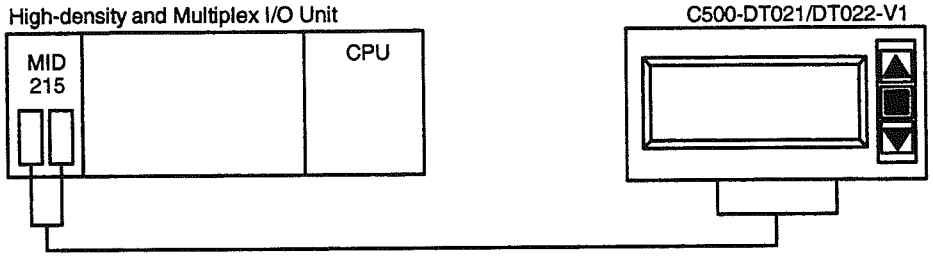

Bit Assignment

Pin No.	Signal name	Bit No.
1	$\overline{\text{D. STB}}$	IR 10012
2 – 7	Not used	
8	DATA0	IR 10000
9	DATA1	IR 10001
10	DATA2	IR 10002
11	DATA3	IR 10003
12	DATA4	IR 10004
13	DATA5	IR 10005
14	DATA6	IR 10006
15	DATA7	IR 10007
16	$\overline{\text{N. STB}}$	IR 10013
17	$\overline{\text{READY}}$	IR 10100
18	GND	N.A
19	GND	N.A
20	DATA8	IR 10008
21	DATA9	IR 10009
22	DATA10	IR 10010
23	$\overline{\text{PAGE INC}}$	IR 10011
24	24 VDC	NA
25	24 VDC	NA

Vacant: IR 100 bits 14 and 15
IR 101 bits 01 through 15

Example Ladder Program

This program is used to display bar graphs. The graphic command data shown in the table on the previous page is stored in the DM area.

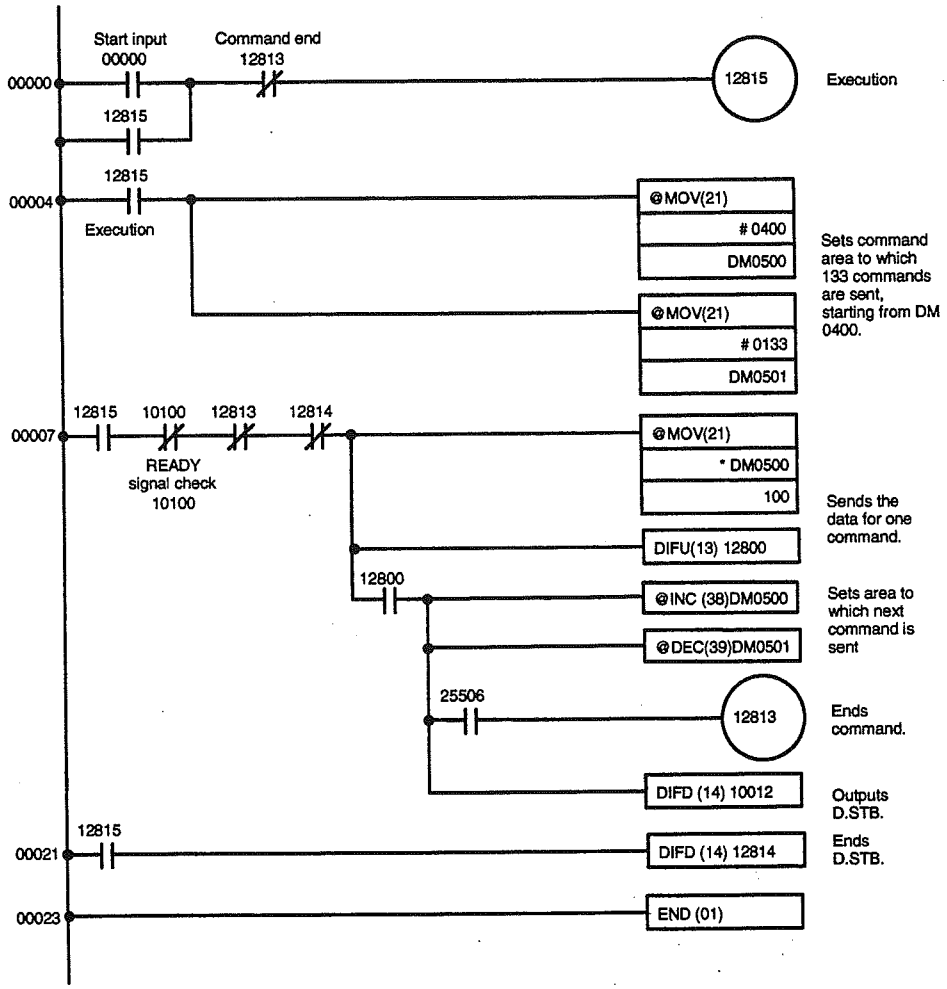

4–5 Page Read Example

Before messages can be read, they must first be registered using the procedures explained in the previous examples.

I/O Timing

I/O timing changes depending on how the strobe signal is used.

With Strobe Signal OFF

The strobe signal is used when DATA lines 0 through 10 are multiplexed with the numeric value display.

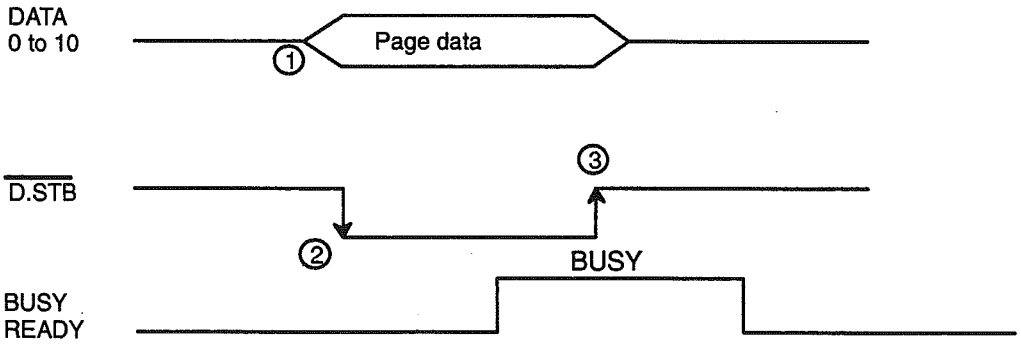

Execution Sequence

1. The READY signal is checked and page data is output.
2. The D.STB (data strobe) goes high after the page data has been transferred.
3. When READY goes high it becomes BUSY. During the BUSY interval, the strobe will turn OFF.
4. Steps (1) to (3) are executed repeatedly to read pages.

With Strobe Signal ON

Pages are read depending on the status of data lines 0 to 10. Usually, a program that reads pages can be developed easily in this mode.

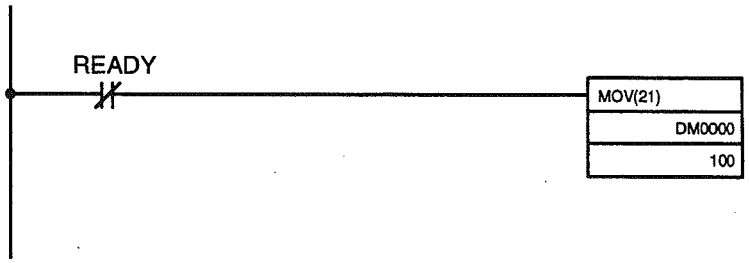

D0000: Stores page data.

100: in the case of the example system shown on page 39.

In this condition, page data is always read; therefore, pages can be set again by changing the contents of DM 0000.

DIP Switch Setting

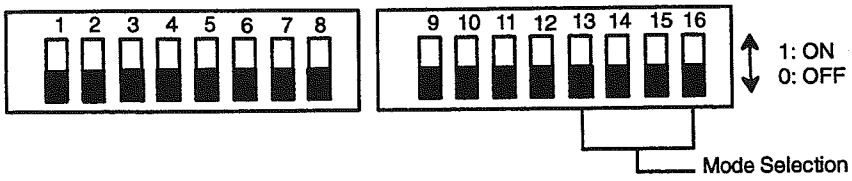

Setting	Pin 1: Data input code	Pin 2: Strobe
0	BCD code	Enabled
1	HEX code	Disabled

Setting	Pin 12: Character size
0	Full-width/ 1/2 width
1	1/4 width

PC Program

This program uses the example system shown on page 31.

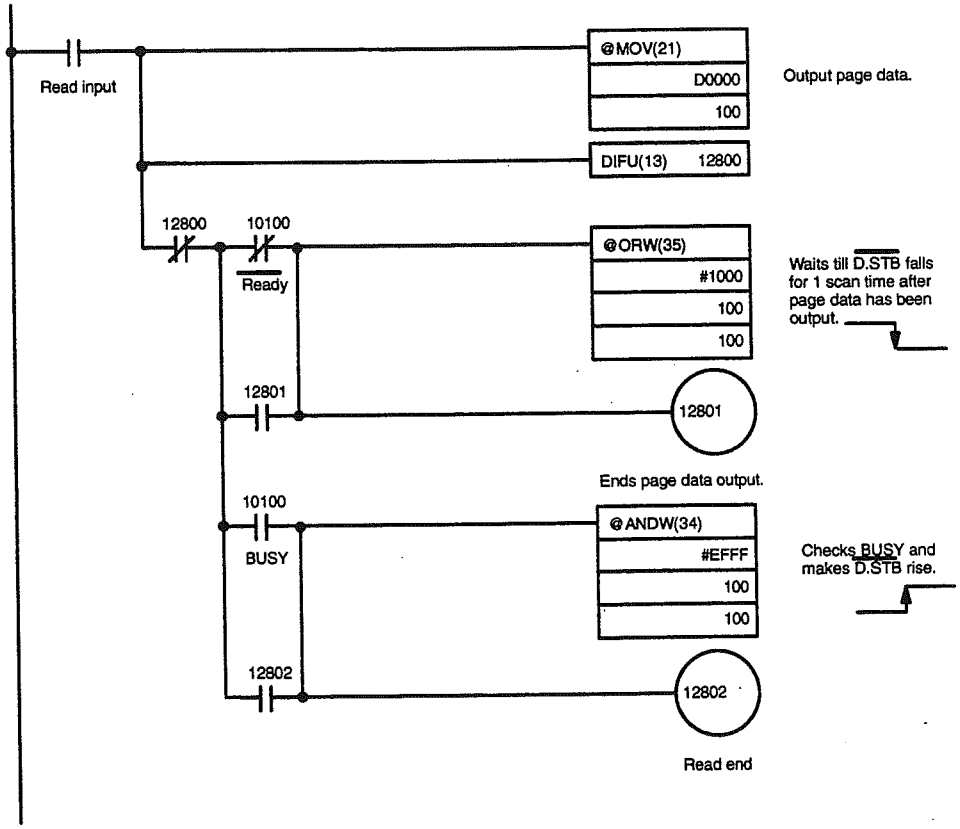

4–6 Application Example

This example illustrates the use of a Display Terminal Unit working in conjunction with a PC to display real-time operational information.

Suppose that one system involves 50 operations and 50 conditions. Then the number of variations to be displayed is 2,500 (50 x 50). These 2,500 variations can be displayed on a single display device using the overlapping display technique, as follows:

1. The display device is arranged so that operations are displayed on the upper two lines, conditions on the lower two lines.
2. Write the following data in BASIC language to the ASCII Unit:

PAINTING
NORMAL

I PAINTINGh VT ESC Y !$ ESC W 3 PAINTING PF

(e.g.,page 0)

Overlapping screen — Display position — Quadruple (2 x 2) — Page end

I NORMALh VT ESC Y # $ ESC W 3 NORMAL PF

(e.g.,page 50)

In this manner, messages are created by prefixing VT code to the beginning of each page.

3. Page data is written to the DM area in the program example. In this manner, data can be displayed in various combinations.

4–7 Numeric Value Display (Command I)

Numeric values can be displayed in one of two modes. Either numeric values are displayed in page read mode directed by the PC or in terminal mode directed by a personal computer or the ASCII Unit. In this section, processing in page read mode is discussed.

As an example, a changing count in a real-time numeric display is illustrated. In preparation for this example, the following screen must be created using graphic commands in BASIC and registered in the RAM card.

Created screen

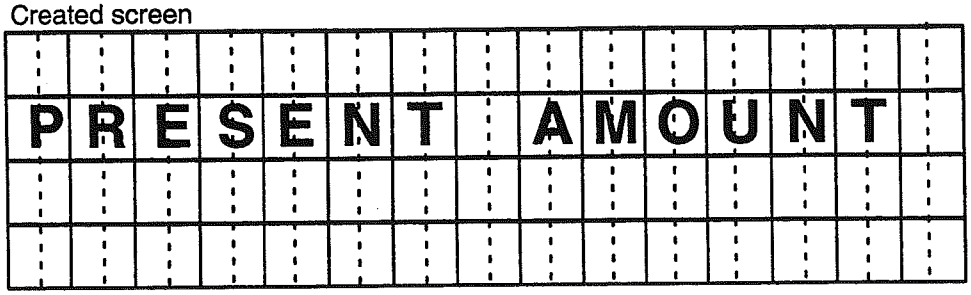

Final screen

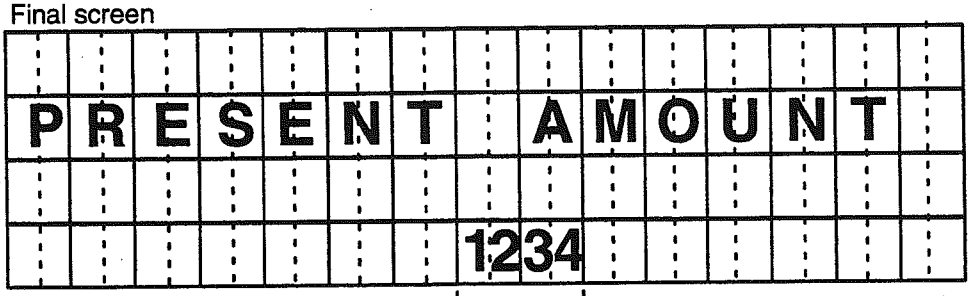

(Numeric data can be displayed in half- or 1/4-width characters.)

Numeric value display area

BASIC Program

The following BASIC program creates and registers the above "created screen."

```
10  OPEN "COM:N81N" AS #2
20  A$=CHR$(&H1B)]                          Specifies ESC as A$.
30  PRINT #2,A$ + "I" + "000";]             Registers data on page 000.
40  PRINT #2,A$ + "Y" + "!" + "";]          Specifies position of
                                            "PRESENT AMOUNT."
50  PRINT #2, + CHR$(&H82) + CHR$(&H6F) + CHR$(&H82)
    +CHR$(&H71) + CHR&(&H82) + CHR$(&H64) + CHR$(&H82) +
    CHR$(&H72) + CHR$(&H82) + CHR$(&H64) + CHR$(&H82)
    +CHR$(&H6D) + CHR$(&H82) + CHR$(H73) + CHR$(&H) +
    CHR$(&H20) + CHR$(&H82) +CHR$(&H60) + CHR$(&H82) +
    CHR$(&H6C) + CHR&(H82) + CHR$(&H6E) + CHR$(&H82)
    +CHR$(&H74) + CHR$(&H82) + CHR$(&H6E) + CHR$(&H82)
    CHR$(&H73);
60  PRINT #2,A$ + "M" + "#" + ".";]         Specifies the numeric display
                                            boundaries.
65  PRINT #2,A$ + "*" + "B";]               Specifies no zero suppression.
70  PRINT #2,CHR$(&HFF);]                   Ends input of message..
80  PRINT #2,"00000...0000"
```

I/O Timing

Because DATA lines 0 through 10 are used for page data as well as for the input of numeric values, the strobe signal is used. Therefore I/O timing is as follows:

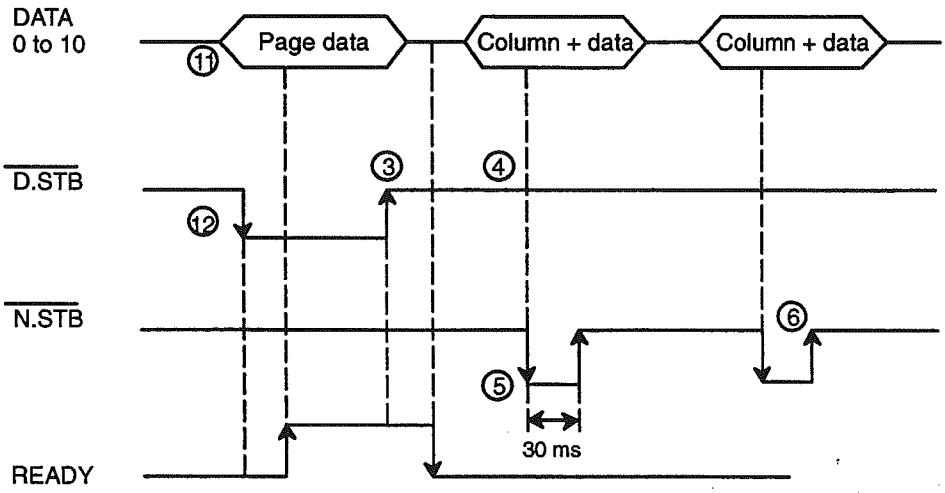

Execution Sequence

1. The READY signal is checked and page data is output.
2. After page data has been output, the D.STB signal goes low.
3. The READY signal is confirmed busy. Then the D.STB signal goes low. This completes the page reading process.
4. After the page has been read, the READY signal is checked, and a column of data is output.
3. After the column of data has been output, the N.STB signal goes low for 30 ms and then high again. This sets the first column of data displayed on the display device.
4. If several columns are to be displayed, step 5 above must be repeated for each column. After all the columns have been displayed, the first column is displayed again (thus repeating steps 5 and 6). This makes numeric value display possible.

DIP Switch Setting

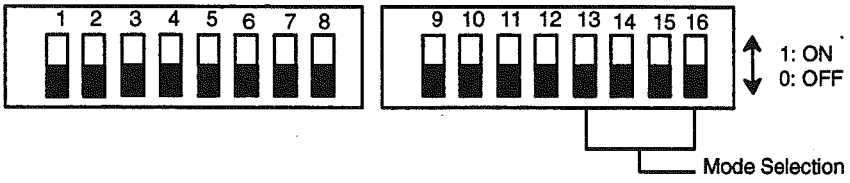

Setting	Pin 1: Data input code	Pin 2: Strobe
0	BCD code	Enabled
1	HEX code	Disabled

Setting	Pin 12: Character size
0	Full-width/ 1/2 width
1	1/4 width

PC Program

Numeric values are displayed as follows:

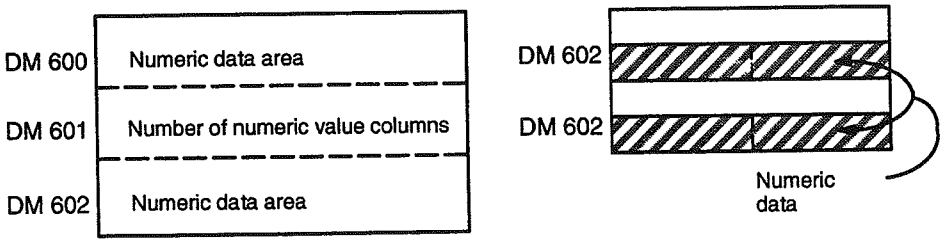

The following PC program stores the necessary numeric data.

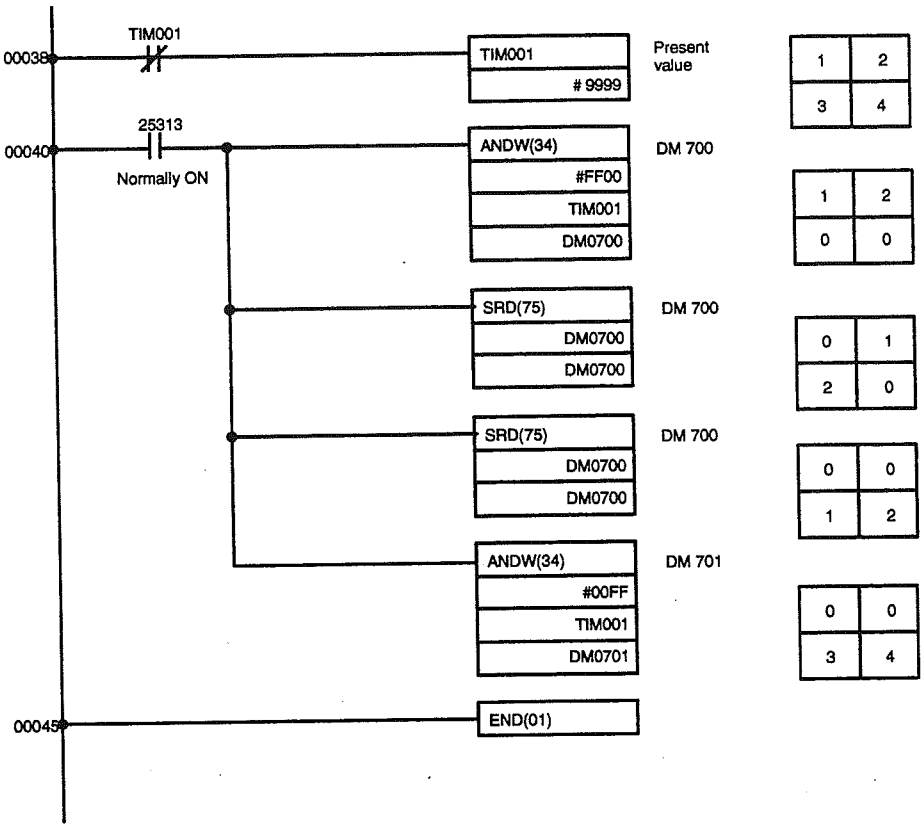

The following example program displays numeric values as shown on the preceding page. This program uses the example system shown on page 31.

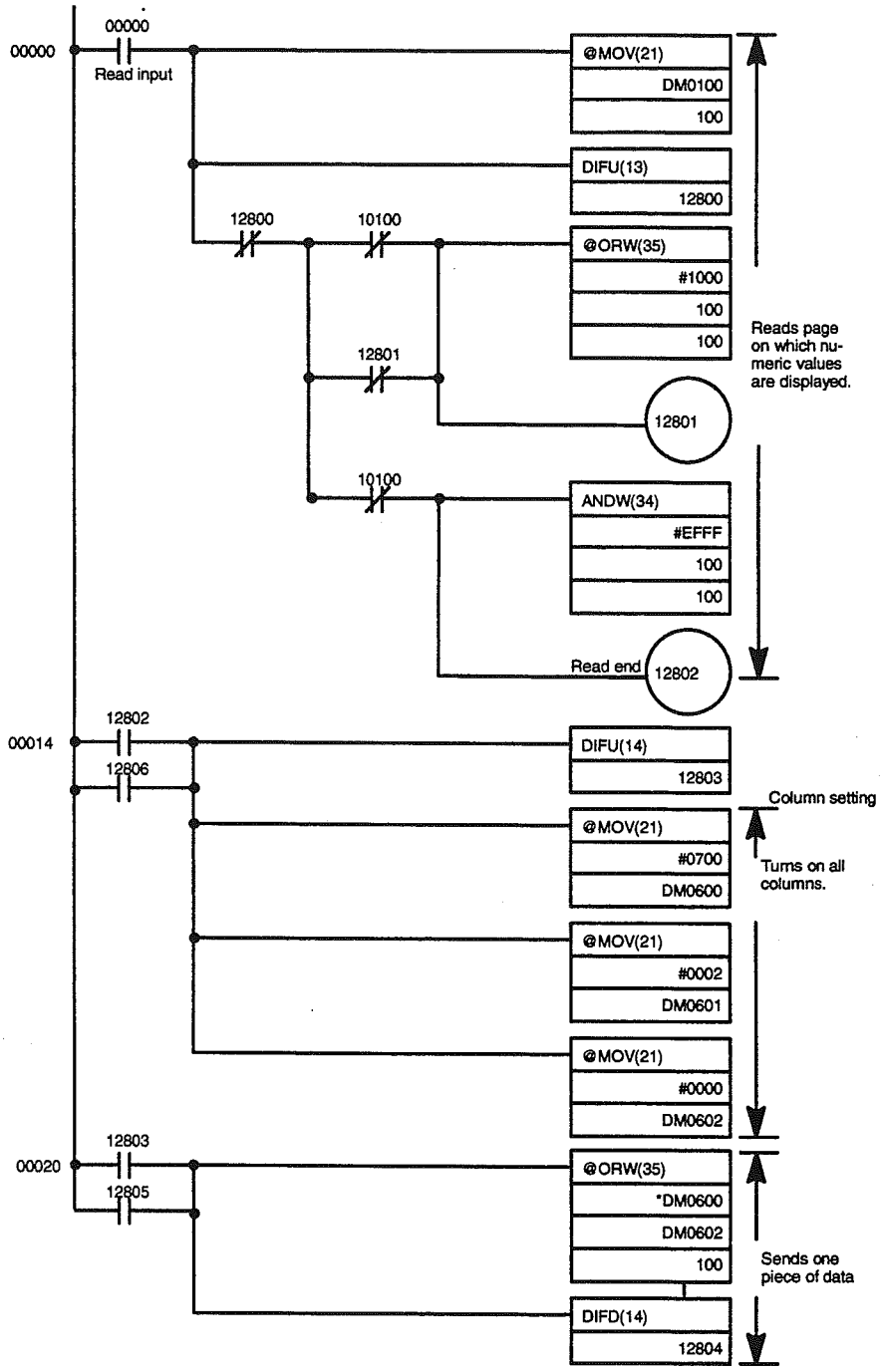

Program continued on the next page

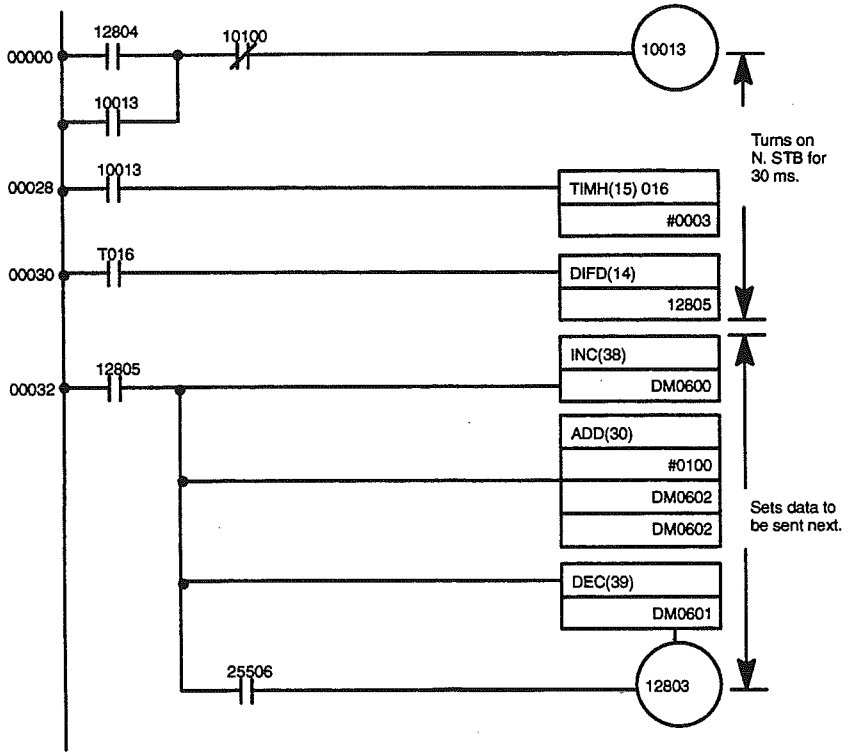
00000
12804
10100
10013
10013
00028
10013
TIMH(15) 016
#0003
Turns on N. STB for 30 ms.
00030
T016
DIFD(14)
12805
00032
12805
INC(38)
DM0600
ADD(30)
#0100
DM0602
DM0602
Sets data to be sent next.
DEC(39)
DM0601
25506
12803

4–8 Bar Graph Display

Bar graphs can be displayed in terminal mode by using the ESC Pm command. In this example, the Display Terminal Unit is controlled by a PC using the parallel interface.

Fixed Graphics

In preparation for this example, the following screen must be created using graphic commands in BASIC and registered in the RAM card.

Created screen

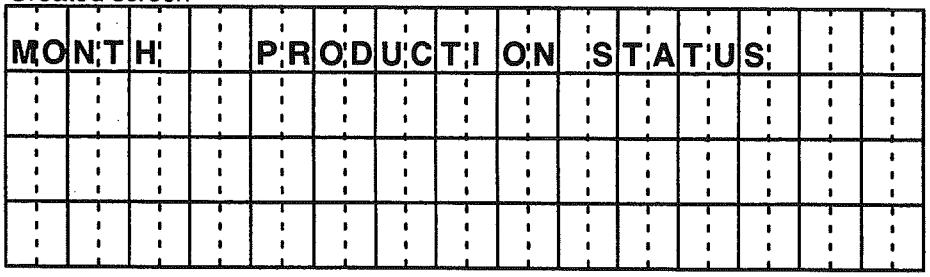

Actual display

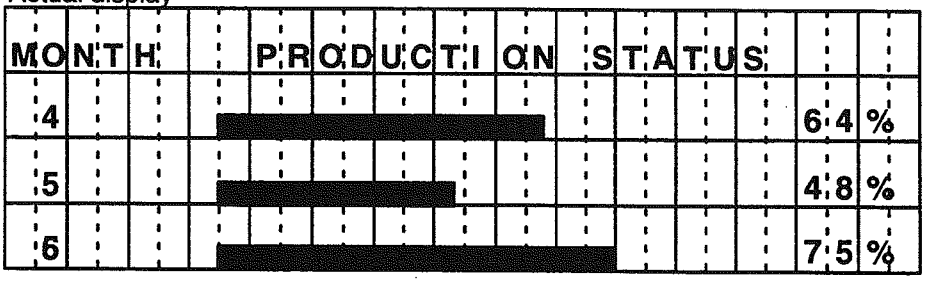

Data and bar graphs charge in real-time.

BASIC Program

The following BASIC program registers the above fixed graphics.

```
10  OPEN "COM:N81N" AS#2
20  A$=CHR$(&H1B)                    Specifies ESC as A$.
30  PRINT #2,A$ + "l" + "123";]
40  PRINT #2,A$ + "Y" + "" + "";]    Specifies position where the
                                     title is written.
50  PRINT #2, CHR$(&H4D) + CHR$(&H4F) + CHR$(&H4E) +
    CHR$(&H54) + CHR$(&H48) +CHR$(&H20) + CHR$(&H20) +
    CHR$(&H20) + CHR$(&H50) + CHR$(&H52) + CHR$(&H4F)
    +CHR&(&H44) + CHR$(&H55) + CHR$(&43) + CHR$(&H54) +
    CHR$(&H49) + CHR$(&H4F) +CHR$(&H4E) + CHR$(&H20) +
    CHR$(&H53) + CHR$(&H54) + CHR$(&H41) + CHR$(&H54)
    + CHR$(&H55) + CHR$(&H53);
60  PRINT #2,CHR$(&HFF);]            Ends input of message.
70  PRINT #2,"0000000...0000"
```

Real-time Graphics

The following graphic commands and programs are for generating the real-time graphics that are superimposed over the fixed graphics created above.

Issue a command to read pages.

DM.	50	51	52	53	54
Data	001B	0050	00m1	00m2	00m3
CAR	ESC	P	m		

Reads page number on which data is displayed.

Input 3-digit ASCII codes for page number m.
Example: To read page 15
0 1 5
30 31 35

Generate April Bar Graph

The following graphic commands generate the "4" for April and the corresponding bar graph.

DM No.	100	101	102	104	105	106	107	108	109	110
Data	001B	0059	0021	0021	0034	001B	0026	0025	0032	0032
CAR	ESC	Y	!	!	4	ESC	&	%	2	2

Specifies position where "4" is written.

Sets origin of bar graph (displayed from the 6th col-umn).
2: 8 dots for bar graph width
2: 2 dots for 1

DM No.	110	111	112	113	114	115	116	117	118
Data	001B	0027	0021	0031	0032	0038	001B	0025	003A
CAR	ESC	'	!	1	2	8	ESC	%	:

Displays bar graph from the 2nd column.
128: Real dot data which can be changed according to the actual numeric value

Calculation and display
(: is displayed from the 27th column.)

This screen is generated by the above graphic commands.

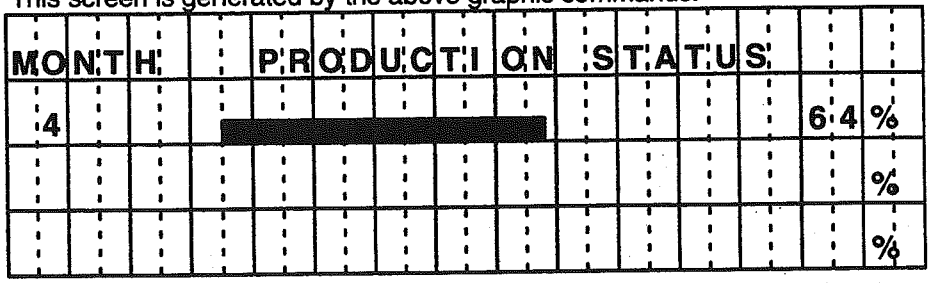

Generate May Bar Graph

The following graphic commands generate the "5" for May and the corresponding bar graph.

DM No.	200	201	202	203	204	205	206	207
Data	001B	0059	0022	0021	0035	001B	0027	0022
CAR	ESC	Y	"	!	5	ESC	'	"

← Specifies position where "5" is written. → | ↔ Month can be changed. | ← Sets bar graph to start from the 3rd column.

DM No.	208	209	210	211	212	213
Data	0030	0039	0036	001B	0025	003A
CAR	0	9	6	ESC	%	:

Real dot data which can be changed according to the actual numeric value → | ← Calculation and display (: is displayed from the 27th column.)

This screen is generated by the above graphic commands.

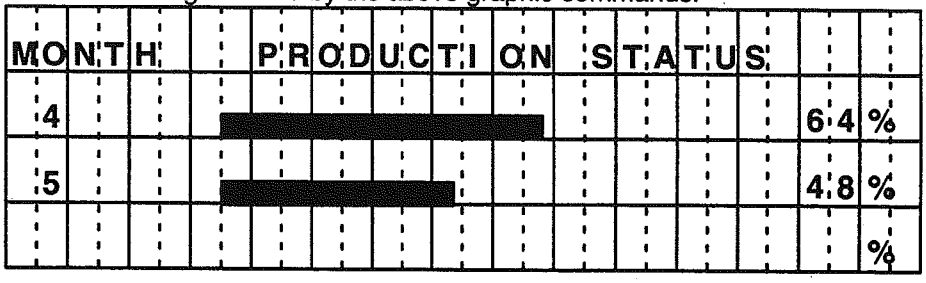

Generate June Bar Graph

The following graphic commands generate the "6" for June and the corresponding bar graph.

DM No.	300	301	302	303	304	305	306	307
Data	001B	0059	0023	0021	0036	001B	0027	0023
CAR	ESC	Y	#	!	6	ESC	'	#

← Specifies position where "6" is written. Month can be changed. ← Sets bar graph to start from the 4th column.

DM No.	308	309	310	311	312	313
Data	0031	0035	0030	001B	0025	003A
CAR	1	5	0	ESC	%	:

Real dot data which can be changed according to the actual numeric value → ← Calculation and display (: is displayed from the 27th column.)

This screen is generated by the above graphic commands.

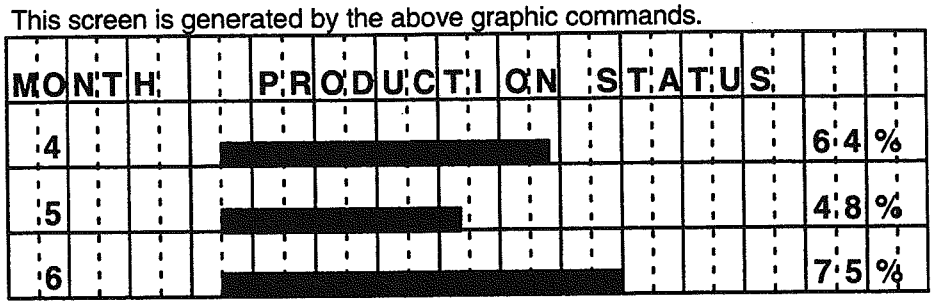

I/O Timing

The commands in the previous steps are issued according to the following I/O timing diagrams.

Command codes are output on DATA lines 0 through 7 as an 8-bit HEX code.

The I/O timing is as follows:

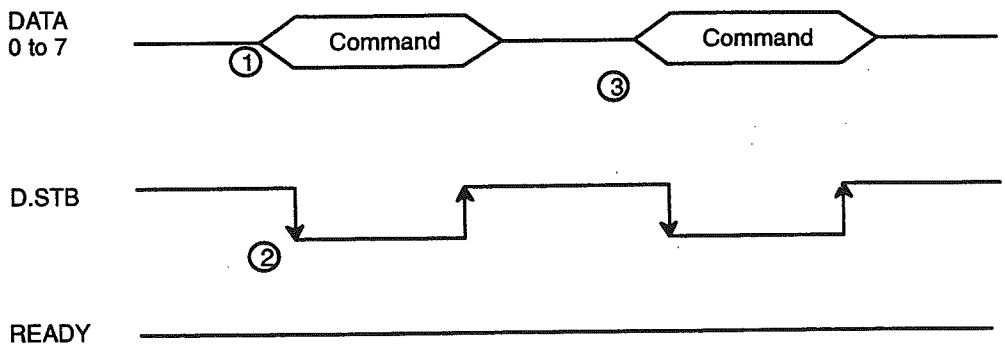

Execution Sequence

1. READY status is checked and the command code is output.
2. After the command has been output, the D.STB signal is turned ON.
3. The next command code is output following steps (1) and (2).

The READY signal goes high when the internal buffer becomes full. Therefore, command data is sequentially accepted while the READY signal is high.

In the PC program example, the commands and data necessary for displaying the bar graphs are stored in DM words. The DM contents are output sequentially. If the contents of DM 104, DM 202, and DM 304, which store months, and the contents of DM 117 to DM 119, DM 208 to DM 210, and DM 308 to DM 310, which store the bar graphs, are changed, different bar graphs can be displayed.

DIP Switch Setting Serial Interface

Stop bits: 1
Parity: None
Data length: 8 bits
Baud rate: 9,600 bps

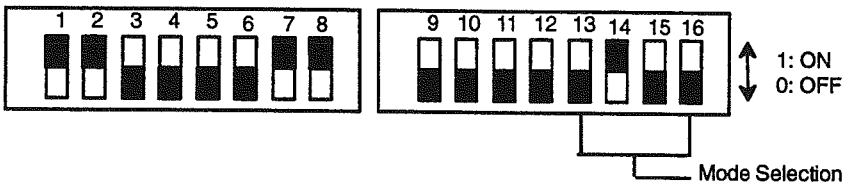

Setting		Baud rate
Pin 1	Pin 2	
0	0	1200 baud
1	0	2400 baud
0	1	4800 baud
1	1	9600 baud

Setting	Pin 3: Data length
0	Eight bits
1	Seven bits

Setting		Parity
Pin 4	Pin 5	
0/1	0	No Parity
0	1	Even Parity
1	1	Odd Parity

Pin 6: Stop bit
One stop bit
Two stop bits

Setting		Transfer control
Pin 7	Pin 8	
0/1	0	None
0	1	XON, XOFF
1	1	Control Signal

Setting	Pin 11: Front Panel Command/ Numeric display command	Pin 12: Character size
0	Disabled/ Command I compatibility	Full-Width/ 1/2 width
1	Enabled/ Command II compatibility	1/4 width

BASIC Program #1

The following program is necessary to display the final screen in serial mode.

```
10   OPEN "COM:N81N" AS #2
20   A$ = CHR$(&H1B)]                    Specifies ESC as A$
30   PRINT #2,A$  + "Y" + "" + "";]      Specifies position of the title.
40   PRINT #2, CHR$(&H4D) + CHR$(&H4F) + CHR$(&H4E) +
     CHR$(&H54) + CHR$(&H48) +CHR$(&H20) + CHR$(&H20) +
     CHR$(&H20) + CHR$(&H50) +CHR$(&H52) + CHR$(&H4F) +
     CHR&(&H44) + CHR$(&H55) + CHR$(&H43) + CHR$(&H54) +
     CHR$(&H49) + CHR$(&H4F) + CHR$(&H4E) + CHR$(&H20)
     +CHR$(&H53) + CHR$(&H54) + CHR$(&H41) + CHR$(&H54) +
     CHR$(&H55) +CHR$(&H53);
50   PRINT #2,A$ + "Y" =  "!" +  "!" + "4";
60   PRINT #2,A$ + "Y" + CHR$(&H22) + "!" + "5";
70   PRINT #2,A$ + "Y" + "#" + "!" + "6';
80   PRINT #2,A$ + "&" + "%" + "22";
90   PRINT #2,A$ + "" + "!" + "128";
100  PRINT #2,A$ + "%" + ":";
110  PRINT #2,A$ + "" + CHR$(&H22) + "096";
120  PRINT #2,A$ + "%" + ":";
130  PRINT #2,A$ + "" + "#" + "150";
140  PRINT #2,A$ + "%" + ":";
150  PRINT #2,CHR$(&HFF);]               Ends input of message.
160  PRINT #2,"0000000....000"
```

BASIC Program #2

This program displays the bar graphs of April, May, and June in serial mode from the ASCII Unit or a personal computer.

```
10   OPEN "COM:N81N" AS #2
20   A$ = CHR$(&H1B)]                    Specifies ESC as A$
30   PRINT #2,A$  + "P" + "123;]         Reads page number to be dis
                                         played.
40   PRINT #2,A$ + "Y" +  "!" +  "!" + "4";]    Display "4".
50   PRINT #2,A$ + "&" + "%" + "22";]           Sets origin of bar graph.
60   PRINT #2,A$ + "" + "!" + "128";]           Displays bar graph.
70   PRINT #2,A$ + "%" + ":";]           Calculation and display from the
                                         27th column.
80   PRINT #2,A$ + "Y" + CHR$(&H22) + "!" + "5";]   Displays "5" and
                                                    specifies position.
90   PRINT #2,A$ + "" + CHR$(&H22) + "096";]        Displays bar graph
                                                    data from the 3rd
                                                    column.
```

100	PRINT #2,A$ + "%" + ":";]	Calculation and display from the 27th column.
110	PRINT #2,A$ + "Y" + "#" + "!" + "6";]	Specifies position where "6" is written.
120	PRINT #2,A$ + """ + "#" + "150";]	Displays bar graph from the 4th column.
130	PRINT #2,A$ + "%" + ":";]	Calculation and display from the 27th column.
140	PRINT #2,CHR$(&HFF);]	Ends input of message.
150	PRINT #2,"0000000....000"	

DIP Switch Setting Parallel Interface

To display bar graphs in parallel mode using the PC program, set the DIP switch setting as follows:

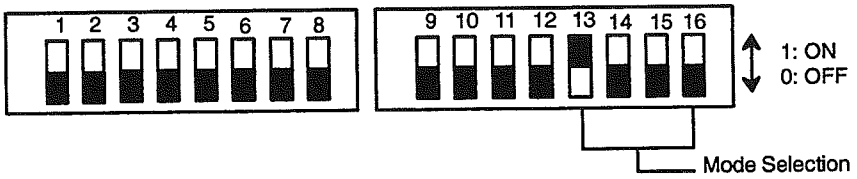

Setting	Pin 11: Front Panel Command/ Numeric display command	Setting	Pin 12: Character size
0	Disabled/ Command I compatibility	0	Full-width/ 1/2 width
1	Enabled/ Command II compatibility	1	1/4 width

PC Program

This program uses the example system shown on page 31.

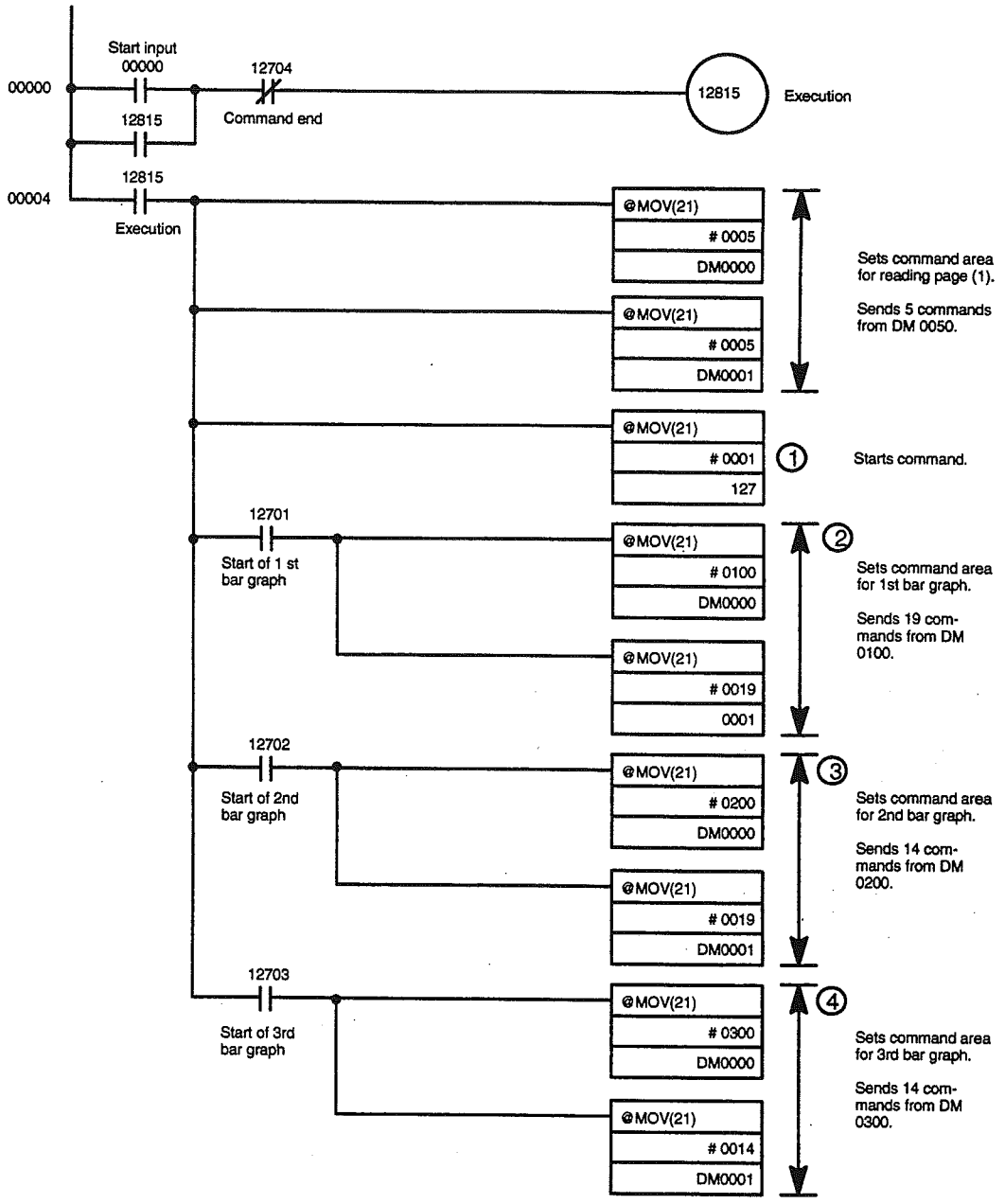

Continued on next page

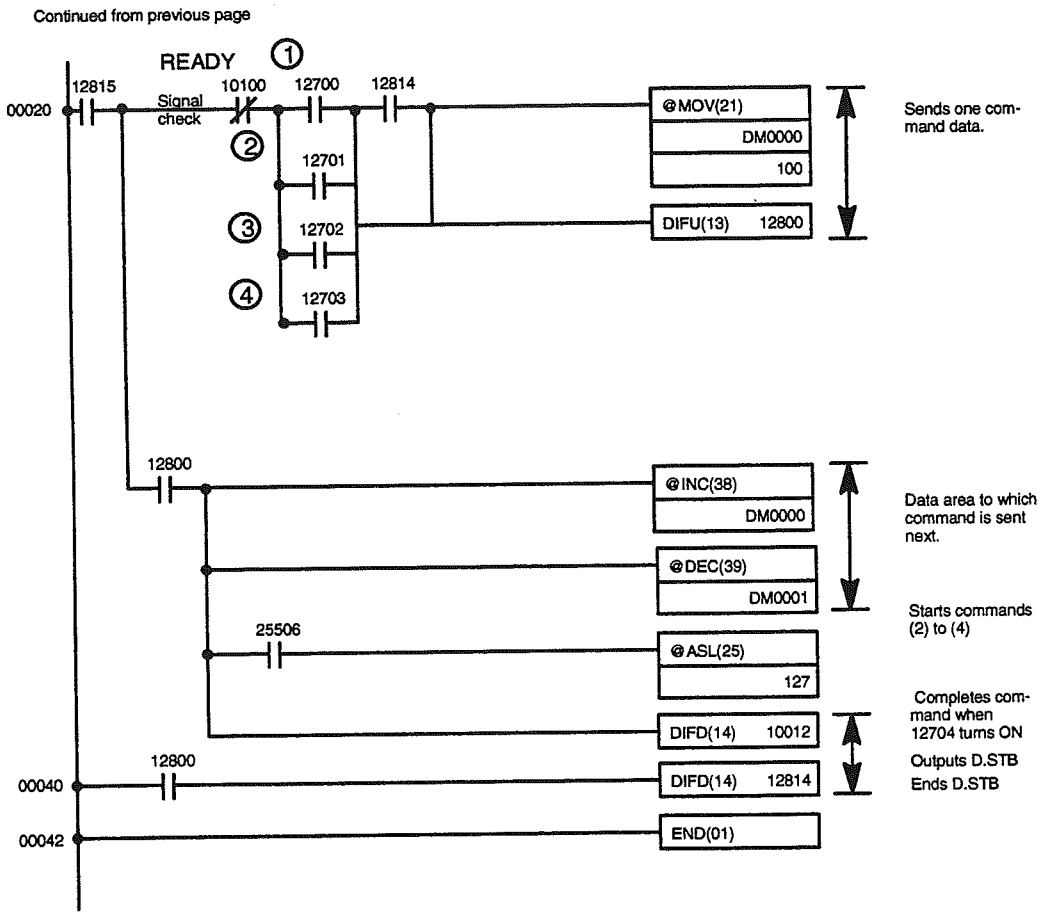
Continued from previous page
READY
①
12815
10100
12700
12814
00020
Signal check
②
12701
③
12702
④
12703
@MOV(21)
DM0000
100
DIFU(13) 12800
Sends one command data.
12800
@INC(38)
DM0000
@DEC(39)
DM0001
Data area to which command is sent next.
25506
@ASL(25)
127
Starts commands (2) to (4)
DIFD(14) 10012
Completes command when 12704 turns ON
12800
00040
DIFD(14) 12814
Outputs D.STB
Ends D.STB
00042
END(01)

4–9 Registering Characters

Example 1: Registering a 1/4-width Character Pattern

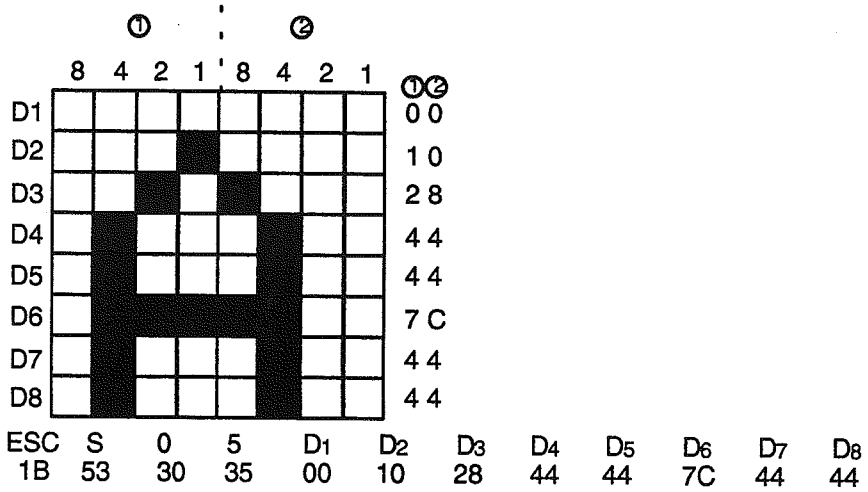

D1 - D8 are used as shown here, in hexadecimal, for pattern data. The length is fixed at 8 columns. "A" is registered as external character #5 in this example.

Read the Registered Character Pattern.

Input "E5", and readout the code for registered pattern #5 from "Readout Codes for Registered Character Patterns." (Equivalent to inputting a message in ASCII code.)

Example 2:

Registering a Half-width Character Pattern.

D1 - D17 are used as shown here, in hexadecimal, for pattern data. The length is fixed at 8 columns. "B" is registered as external character #10 in this example.

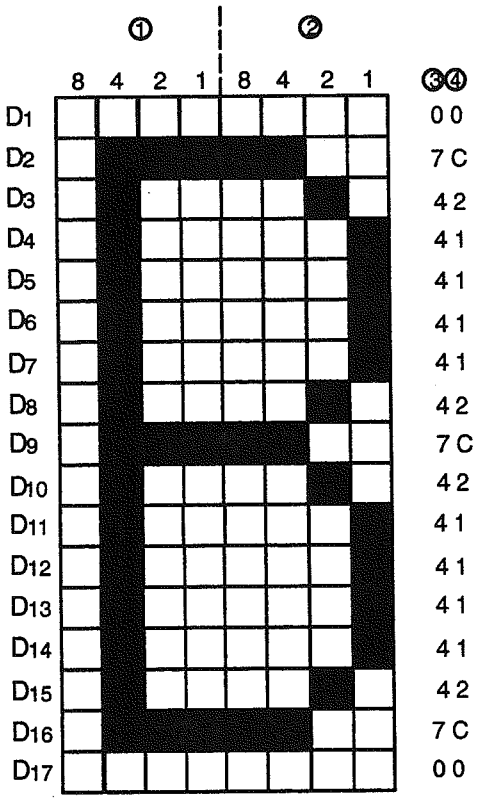

ESC	T	1	0	D1	D2	D3	D4	D5	D6	D7	D8
1B	54	31	30	00	7C	42	41	41	41	41	42

D9	D10	D11	D12	D13	D14	D15	D16	D17
7C	42	41	41	41	41	42	7C	00

Read the Registered Character Pattern.

Input "EA", and readout the code for registered pattern #10 from "Readout Codes for Registered Character Patterns."

To register a 1/4-width character pattern, set DIP switch pin 12 to 1/4-width.

Example 3: **Registering a Full-width Character Pattern.**

D1 - D34 are used as shown here, in hexadecimal, for pattern data. The length is fixed at 16 columns. The pattern below is registered as external character #15 in this example.

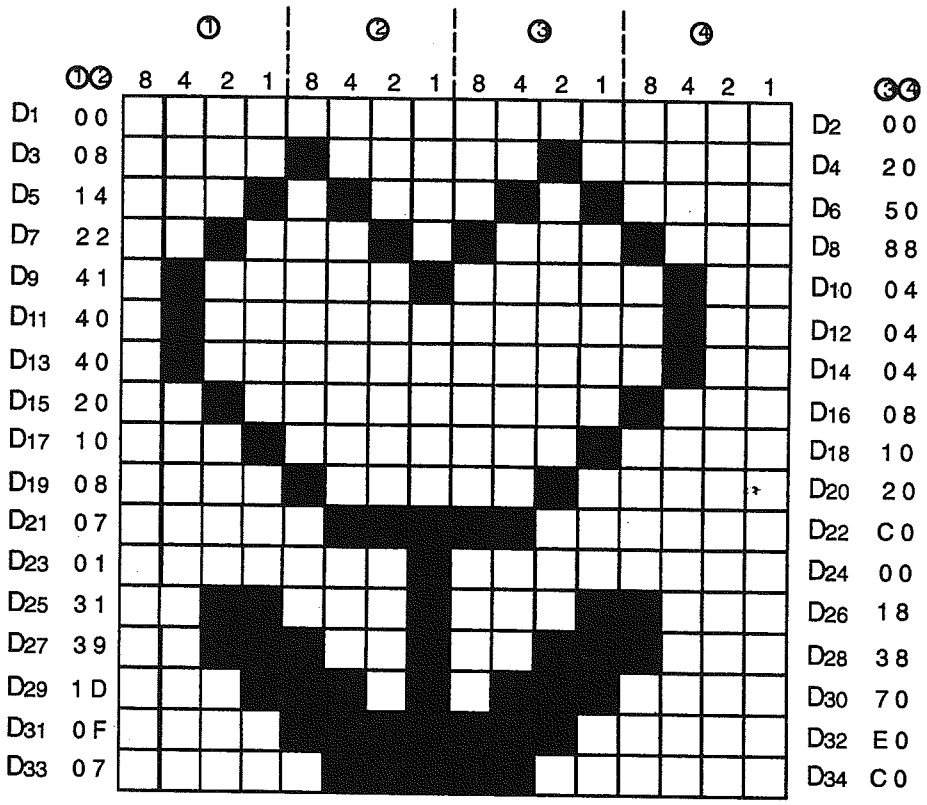

ESC	G	1	5	D1	D2	D3	D4	D5	D6	D7	D8
1B	47	31	35	00	00	08	20	14	50	2	88

D9	D10	D11	D12	D13	D14	D15	D16	D17	D18	D19	D20
41	04	40	04	40	04	20	08	10	10	08	20

D21	D22	D23	D24	D25	D26	D27	D28	D29	D30	D31	D32
07	C0	01	0	31	18	39	38	1D	70	0F	E0

D33	D34
07	C0

Read the registered character pattern.

Input "884F" (SHIFT JIS) and readout the code for registered pattern #15 from "Readout Codes for Registered Character Patterns." When power is turned ON, SHIFT JIS is the default setting.

Appendix A
Specifications

Display Terminal Unit

Item	Specifications
Supply Voltage	+10% 24 VDC –15%
Operating voltage range	20.4 to 26.4 VDC
Power consumption	10 W max. (5 W normal)
Insulation resistance	10 M (at 500 VDC) between external and ground terminal
Dielectric strength	1,500 VAC 50/60 Hz for 1 minute between power lines and ground terminal
Noise immunity	1,000 Vp-p, pulse lapse: 100 ns to 1 s, rise time: 1 ns
Vibration	10 to 35 Hz, 1-mm double amplitude, in X, Y, and Z directions for 2 hours each
Shock	10 G in X, Y, and Z directions, 3 times each
Ambient temperature	Operating: 0 C to 40 C Storage: –20 C to 60 C
Humidity	35 % to 85 % RH (non–condensing)
Atmosphere	Free from corrosive gas
Weight	1.0 kg max.
Dimensions	168 (W) x 84 (H) x 62 (D) mm

Item	Specifications
Display	Dot matrix LCD panel (full graphic)
Character dimensions	In full width: 15 characters x 4 lines = 60 characters (9.24 x 8.06 mm each) In half-width: 30 characters x 4 lines = 120 characters (7.5 x 3.74 mm each) In 1/4 width: 30 characters x 8 lines = 240 characters (4.02 x 2.66 mm each) Characters can be enlarged in horizontal and/or vertical directions as follows: Double-width: 1 x 2 Double-height: 2 x 1 Four-fold: 2 x 2 Nine-fold: 3 x 3 Sixteen-fold: 4 x 4
Life expectancy of LCD	50,000 hours
No. of messages that can be registered	200 (with RAM or 32K-byte ROM) 456 (with 64K-byte ROM)
Displayed character types	Alphanumeric characters and symbols: 158 JIS 1st standerd: 2,965 (displayed characters can blink or be reversed)
Screen processing functions	Bar graph Percentage computation and display
Screen updating functions	Clear paging (to erase and display old or new screens) Overlapping (overlaps one screen onto another) Alternate display (displays specified screens sequentially) Screens can also be updated by the square and arrow keys on the front panel.
Backlight	Three illumination colors (red, green, and orange) can be selected by two (red and green) LEDs
Life expectancy of RAM card back-up battery	5 years (at 25 C)

Display Terminal Unit Dimensions

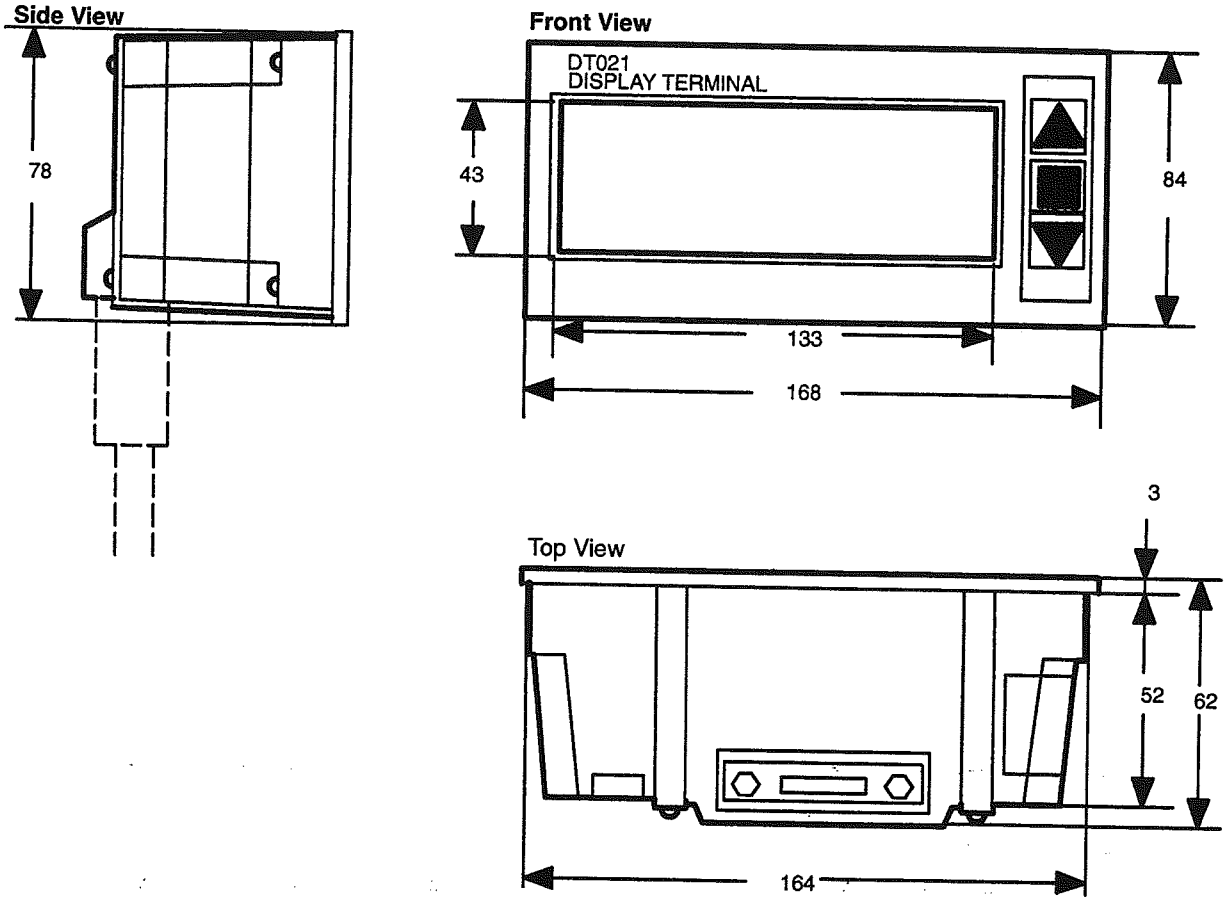

All dimensions are in millimeters.

Internal Diagram of C500–DT021/022

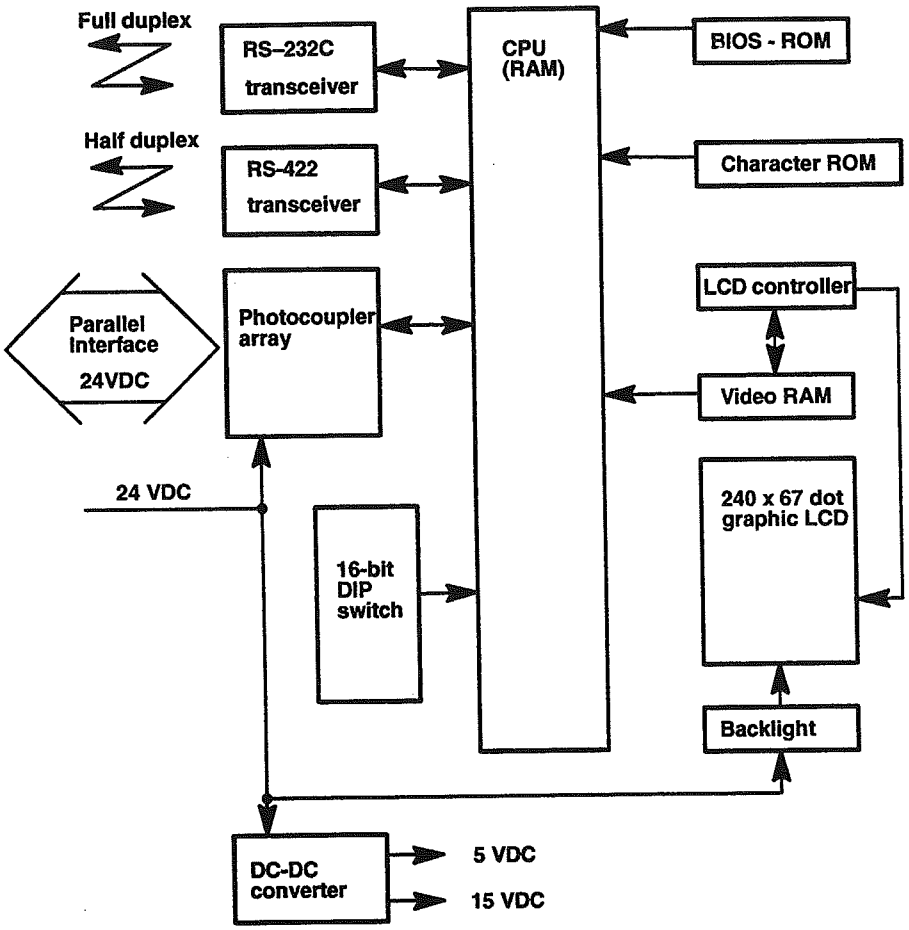

I/O Unit Specifications for Parallel Mode

Input Unit Specifications

Item	Specifications
Input voltage	24 VDC +10% −15%
Input impedance	3.3K
Input current	7 mA standard (24 VDC)
ON response time	1.5 ms
OFF response time	1.5 ms
ON voltage	5.0 VDC min.
OFF voltage	16.0 VDC max.
Input logic	Negative
Number of circuits	14 points min.

Input Unit Circuit

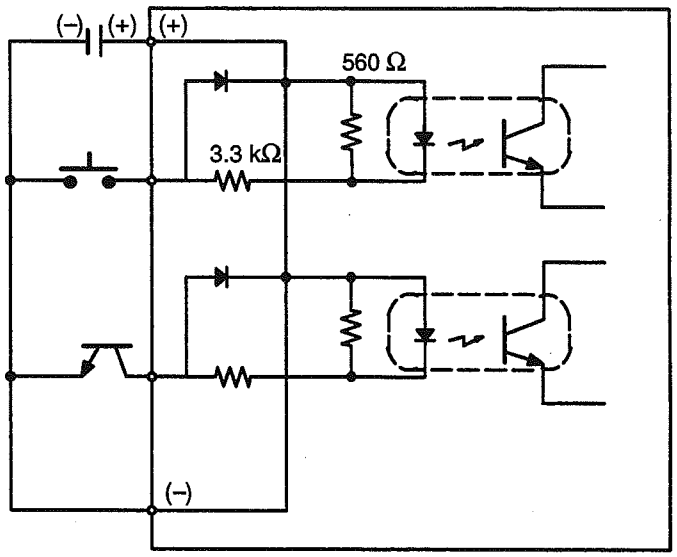

Output Unit Specifications

Item	Specifications
Maximum switching capacity	24 VDC +10% −15% 10 mA/point
Residual voltage	1.0 V max.
ON response time	0.2 ms max.
OFF response time	0.3 ms max.

Output Circuit

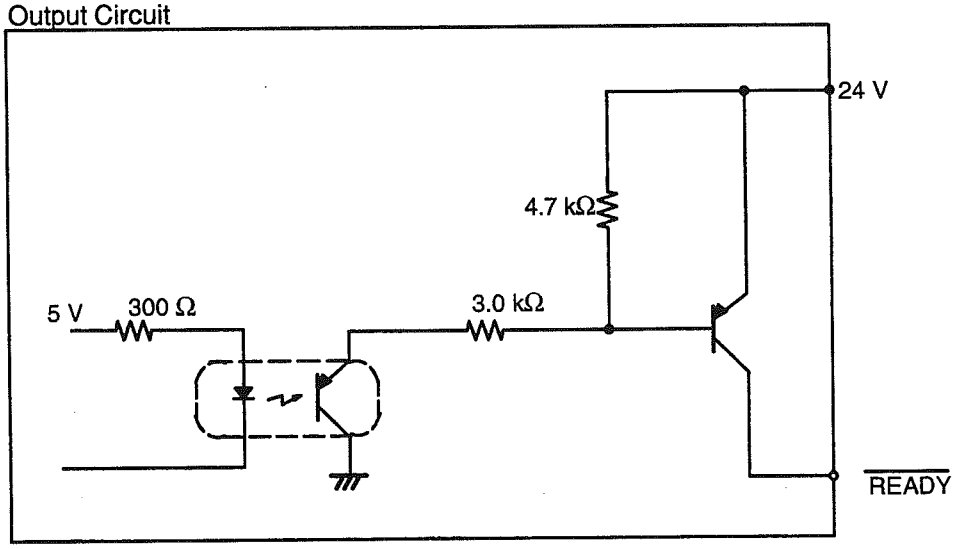

Appendix B
Commands

The following tables list and explain all of the Display Terminal Unit's text and graphic commands. These commands control the position and mode of the cursor as well as the size, position, and appearance of characters and graphics. These commands are implemented within a BASIC program on a personal computer or ASCII Unit and in ladder diagram programming on the PC.

Command Code	Name	Function	Comments	Mode
CR (0D)	Carriage Return	Moves the cursor to the beginning of the line.		P,T
LF (0A)	Line Feed	Moves the cursor down 1 line.	If the character size is changed before LF, the line is fed accordingly.	P,T
ESC A (1B) (41)	Cursor Up	Moves the cursor up 1 line. (If the cursor is at the top line, it moves to the bottom line.)	Lines are fed from the home position. All control codes beginning with ESC move the cursor over a 30-column by 4-line field (8 lines for 1/4-width characters), starting from the home position.	P,T
ESC B (1B) (42)	Cursor Down	Moves the cursor down 1 line. (If the cursor is at the bottom line, it moves to the top line.)		
ESC D (1B) (44)	Cursor Right	Moves the cursor to the right 1 column. (If the cursor is at the end of the line, it moves to the beginning of the line.)		
ESC Y rc (1B) (59)	Cursor Addressing	Specifies the cursor position. r=rows: 20-23 full or 1/2 width 20-27 1/4 width c=columns: 20-30	Specifies the lower leftmost point of a character as the display position. (Enlargement is effected upward and to the right.)	P,T
ESC X rc (1B) (58)	Auto-cursor Control	Displays characters beginning at the last cursor position of the previous display. (Two or more pages can be displayed.)	Once read, the ESC X command is not canceled until the ESC Z command is read.	P,T
ESC Z (1B) (5A)	Auto-cursor Control Cancel	Cancels the ESC X command.		
F/F (0C)	Form Feed	Erases the screen and moves the cursor to the home position.	A previous enlargement command is not cleared.	P,T
ESC E (1B) (45)	Erase All	Erases the screen and moves the cursor to the home position.		

Command Code	Name	Function	Commands	Mode
ESC # (1B) (23)	Full-width Characters	Turns full-width characters ON, SHIFT JIS OFF.	Full-width characters or JIS SHIFT ON requires 2 bytes; half-width characters require 1 byte. 1/4 width characters cannot be used. Default set when power is turned ON is half-width characters (JIS SHIFT ON).	P,T
ESC $ (1B) (24)	Half-width Characters	Turns half-width characters ON, SHIFT JIS ON.		
ESC W m (1B) (57)	Character Width	m=0 (30) standard (1x1) m=1 (31) double width (1x2) m=2 (32) double height (2x1) m=3 (33) 4 times (2x2) m=4 (34) 9 times (3x3) m=5 (35) 16 times (4x4)		
ESC 0 (1B)	All OFF	Sets standard characters (reverse OFF, blinking OFF).	Both reverse display and blinking display can be applied to each character independently.	P,T
ESC 1 (1B)	Reverse ON	Sets characters in reverse display.		
ESC 2 (1B)	Reverse OFF	Cancels reverse character display.		
ESC 3 (1B)	Blinking ON	Sets blinking character display (blinking every 0.5 s).		
ESC 4 (1B)	Blinking OFF	Cancels blinking character display.		
VT (0B)	Superimpose Screen	When the VT code is at the beginning of a page, that page is superimposed over the previous screen, which remains uncleared. The VT command is effective only on screens containing the VT code. If a page message containing no VT code is invoked, the previous page is cleared and rewritten.	VT codes are not counted as a character.	P

Command Code	Name	Function	Commands	Mode
Numeric value display position [Command I]: ESC M rc (1B) (4D)	Numeric value display position	Specifies the position of a numeric value. The row and column specify the position of the first value. r=row designation, 1 (20) to 4 (23) or 8 (27) in the case 1/4 width characters. c=column designation, 1 (20) to 30 (30)	This command is effective only when mode set switch 11 is set to OFF Numeric values are displayed in full, half, or 1/4 width, depending on the specification. If no position is specified, display begins at the last or next to last line. Numerals cannot be enlarged.	P
ESC * m (IB) (24)	Counter control	m=0 (30) no decimal xx m=1 (31) decimal position xx m=2 (32) decimal position xx m=3 (33) decimal position xx A (41) with zero suppress B (42) without zero suppress	If nothing is specified, zero suppress with no decimal will be effective. The specifications are effective until replacement by new specifications.	
Numeric value display designation [Command II]: ESC M rcmno (1B) (4D)	Numeric value display designation	Specifies the position of a numeric value. r=row designation, 1 (20) to 4 (23) c=column designation, 1 (20) to 30 (30) m=no. of displayed columns, 1 (31) to 8 (38) n=decimal position, 0 (30) to 8 (38); no decimal is displayed when 0 (30) is designated. o=zero suppress, 9 (30) without zero suppress, 1 (31) with zero suppress Display starts when 0 is designated for D8, D9, and D10 (when the lowest digit of the displayed value is designated) The specifications are effective until replacement by new specifications. The displayed area is from the origin to the last column of the line.	The default settings are as follows: r=4 (23) c=23 (36) m=8 (38) n=0 (30) 0=1 (31) This command is effective only when mode set switch 11 is set to ON.	
ESC : m (1B) (3A)	Front panel key command	Disables the Up and Down keys. m=0 (30) disables both Up and Down Keys. m=1 (31) disables the Up Key. Only the Down Key is effective. m=2 (32) disables the Down Key. Only the Up Key is effective. m=3 (33) disables neither key.	The default setting is m=0. This command is nullified after a page change. To display consecutive pages in the page read mode with the Up and Down Keys, this command must be registered in advance on each page. However, only the last command issued will be effective. This command is effective only when mode set switch 11 is ON.	

Command Code	Name	Function	Comments	Mode
ESC . (1B) (2E)	Two Pages on One Screen	If 1 page (128 bytes) is insufficient, 2 successive pages can be displayed when this command is read.	Despite the name of this command, it is not limited to 2 pages. Any number of pages can be successively displayed.	P
PE (FF)	Page End	This code after a message indicates the end of this page.		P
IR (FE)	Increment Return	This code after a message indicates the end of page increment when page increment is being used.		
ESC R m (1B) (52)	Back Light ON/OFF	m=0 (30) OFF m=1 (31) red m=2 (32) green (default) m=3 (33) orange	The color of the back light is changed only while this command is registered in the current page.	P
			After the color of the back light is changed by this command, the color remains in effect until a new command is input.	T
ESC – m (1B) (2D)	Alternate Display	m=A (41) Ends alternate display m=B (42) Starts alternate display m = 1 (31) Alternates every 2 s m = 2 (32) Alternates every 3 s m = 3 (33) Alternates every 4 s m = 4 (34) Alternates every 5 s If 2 or more pages are read after this command is read, up to 10 pages can be alternately displayed at 3-s intervals.	If an interval is not specified, the display is alternated every 3 seconds.	P, T
ESC / (1B) (2F)	Auto Increment	When this command is read, pages are alternately incremented until new page data is input.	The display is alternated every 3 s.	P
ESC + m (1B) (2B)	Related Screen Readout	Pressing the key for reading related screens after a page in which this command is registered has been read will display the screen designated by m. Related screens are displayed in turn every 3 s for as long as this command is registered. m = 000 to 199 to 455 (30) (31) (34) (35)	m = a 3-digit ASCII number PO-P199 (32K bytes) PO-P455 (64K bytes)	P

Command Code	Name	Function	Comments	Mode
ESC ! m (1B) (21)	Kanji Code Error Display	Sets displays option for erroneous kanji code. m = 0 (30) skip m = 1 (31) display a space m = 2 (32) display an error message	The default setting skips an unregistered kanji code.	P, T
ESC J (1B) (4A)	Erase to End of Screen	Clears the display from the current cursor position to the 30th column of the bottom line.	ESC K and ESC J leave the cursor position unchanged. ESC L moves the cursor to the first column of the current line.	T
ESC K (1B) (4C)	Erase to End of Line	Clears the display from the current cursor position to the 30th column of the current line.		
ESC L (1B) (4C)	Clear Line	Clears the display from the first column to the 30th column of the current line.		
ESC P m (1B) (50)	Page Readout	Clears the screen, then reads the contents of the user message and displays it. m = 000 to 199 to 455	m = a 3-digit ASCII number PO-P199 (32K bytes) PO-PO455 (64K bytes)	T
ESC U (1B) (55)	Display Next Page	Reads and displays the page that follows the current page.	ESC U when the last page is displayed causes the 0th screen to be displayed.	
ESC V (1B) (56)	Display Previous Page	Reads and displays the page that came before the current page.	ESC V when the 0th page is displayed causes the 199th or the 455th screen to be displayed.	
ESC I m D1-D128	Register Message	Registers a user message from a personal computer in RAM. m = a 3-digit number assigned to the screen to be registered (page) (000-199) The data after m (D1-D128) is fixed at 128 columns.	The maximum number of the screens that can be registered is 200.	T

Command Code	Name	Function	Comments	Mode
ESC S m D1-D8	1/4-Width (8x8) Character Pattern Registration	Registers a user character of 8 dots x 8 dots. m = a 2-digit registration number (00-15). 1/4-width characters cannot be mixed with full or half-width characters. Sets DIP Switch Pin 12 to ON (1/4-width characters).	The maximum number of characters that can be registered is 16.	T
ESC T m D1-D17	Half-Width (17x8) Character Pattern Registration	Registers a user character of 17 dots x 8 dots. m = a 2-digit registration number (00-15).	The maximum number of characters that can be registered is 16.	T
ESC G m D1-D34	Full-Width (17x16) Character Pattern Registration	Registers a user character of 17 dots x 16 dots. m = a 2-digit registration number (00-49).	The maximum number of characters that can be registered is 50.	T
ESC & l m n (1B) (26)	Bar Graph Reference Point	Sets reference point, width, and length of 1% for a bar graph. l = column for reference point. 1 (20) to 26 (39); m = width of bar graph m = 1 (31) 4 dots m = 2 (32) 8 dots m = 3 (33) 12 dots m = 4 (34) 16 dots n = number of dots for 1% (a 1-digit ASCII number)	Set to first column by default Set to 12 dots by default.. Set to 1 dot for 1% by default.	P, T
ESC ' m n (1B) (27)	Bar Graph Display	Displays a bar graph at the specified position. m = number of lines to display See Note on p. 68. n = real dot data (3-digit ASCII number)	Up to 4 lines of bar graph can be per page. The last four columns are for half-width characters and cannot be used for bar graphs.	
ESC % m (1B) (25)	Percent Operation Display	Converts real dot data for bar graphs into percent and displays the results as half-width characters. m = number of columns to display. 1 (20) to 29 (3C)	Input this command after Bar Graph Display has been executed.	P, T

Command Code	name	Function	Comments	Mode
ESC (m (1B) (28)	Communication Start	Used to start communication under RS-422 specifications. m = polling address accessed by this Unit. 00 (30, 30) to 15 (31, 35) The polling address is a 2-digit ASCII number.	Communication with any connected station is possible when m is a value other than 00 (30, 30) to (31, 35).	T
ESC) (1B) (29)	Communication End	Ends communication initiated by this Unit		

Note Attribute and backlight with ON/OFF specifications are not released once they are turned ON unless they are set to OFF.

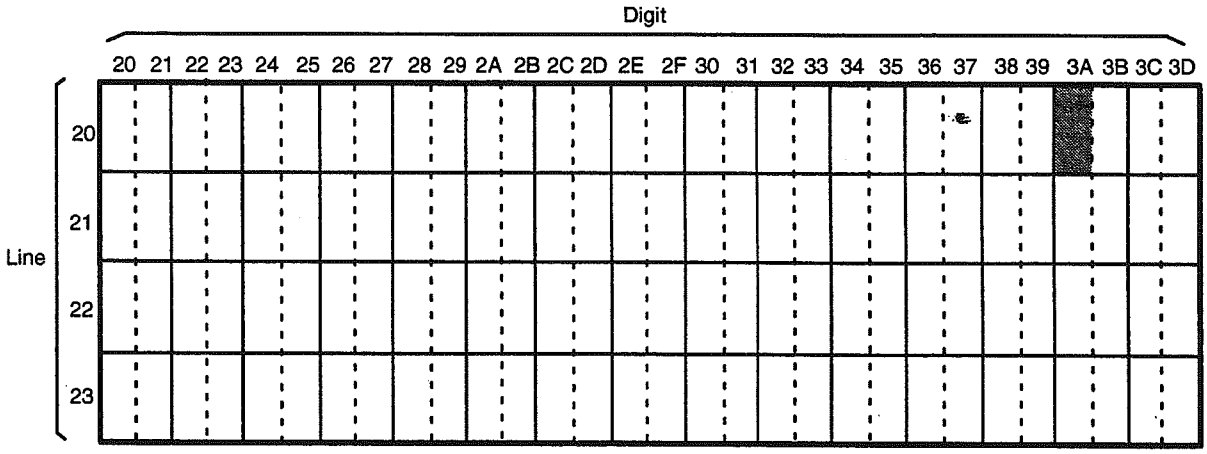

- ESC M rc — Numeric Value Display Position [Command I]
- ESC M rcmno — Numeric Value Display Designation [Command II]
- ESC Y rc — Cursor Addressing
- ESC & *l*mn — Bar Graph Reference Point
- ESC ' mn — Bar Graph Display
- ESC % m — Percent Operation Display

To use this command specify the line and digit according to the above allocations.

Example: The value of m at the ESC ' m n bar graph display is,
m = 20 when displayed in the first line
m = 21 when displayed in the second line
m = 22 when displayed in the third line
m = 23 when displayed in the fourth line
For example, the value of m of the percent operation display for ESC % m is m = 3A when displayed as the 27th digit. (shaded area)

Readout Codes for Registered Character Patterns

Characters registered as patterns are displayed using the following readout codes.

1/4-width (8 x 8 matrix) Character Patterns				Half-width (17 x 8 matrix) Character Patterns			
No	Code	No	Code	No	Code	No	Code
0	E0	8	E8	0	E0	8	E8
1	E1	9	E9	1	E1	9	E9
2	E2	10	EA	2	E2	10	EA
3	E3	11	EB	3	E3	11	EB
4	E4	12	EC	4	E4	12	EC
5	E5	13	ED	5	E5	13	ED
6	E6	14	EE	6	E6	14	EE
7	E7	15	EF	7	E7	15	EF

Full-width (17 x 16 matrix) Character Patterns											
	Code			Code			Code			Code	
No	JIS	SHIFT JIS	No	JIS	SHIFT JIS	No	JIS	SHIFT JIS	No	JIS	SHIFT JIS
0	2F21	8840	13	2F2E	884D	26	2F3B	885A	39	2F48	8867
1	2F22	8841	14	2F2F	884E	27	2F3C	885B	40	2F49	8868
2	2F23	8842	15	2F30	884F	28	2F3D	885C	41	2F4A	8869
3	2F24	8843	16	2F31	8850	29	2F3E	885D	42	2F4B	886A
4	2F25	8844	17	2F32	8851	30	2F3F	885E	43	2F4C	886B
5	2F26	8845	18	2F33	8852	31	2F40	885F	44	2F4D	886C
6	2F27	8846	19	2F34	8853	32	2F41	8860	45	2F4E	886D
7	2F28	8847	20	2F35	8854	33	2F42	8861	46	2F4F	886E
8	2F29	8848	21	2F36	8855	34	2F43	8862	47	2F50	886F
9	2F2A	8849	22	2F37	8856	35	2F44	8863	48	2F51	8870
10	2F2B	884A	23	2F38	8857	36	2F45	8864	49	2F52	8871
11	2F2C	884B	24	2F39	8858	37	2F46	8865			
12	2F2D	884C	25	2F3A	8859	38	2F47	8866			

Appendix C
Errors and Troubleshooting

The following operations are performed in Self-Diagnosis mode and are used to verify the correct functioning of the Unit. Unless otherwise noted, the checking operations below will perform repeatedly until the DIP switch setting is changed or the power is disconnected.

Memory Check

DIP Switch Settings

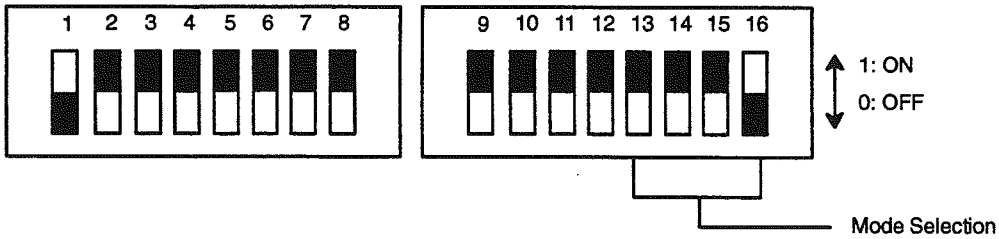

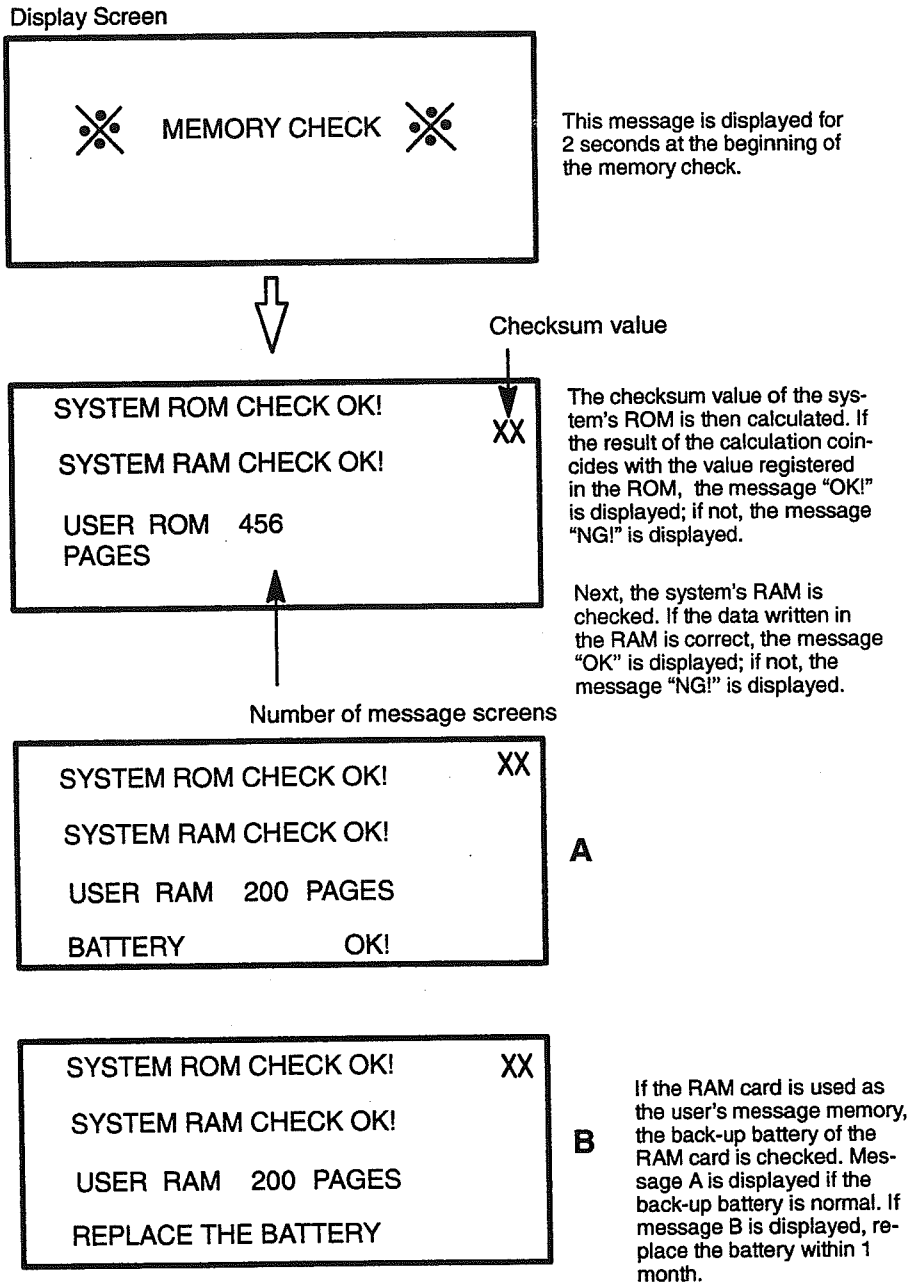
Display Screen
MEMORY CHECK
This message is displayed for 2 seconds at the beginning of the memory check.
Checksum value
SYSTEM ROM CHECK OK!
XX
SYSTEM RAM CHECK OK!
USER ROM 456 PAGES
The checksum value of the system's ROM is then calculated. If the result of the calculation coincides with the value registered in the ROM, the message "OK!" is displayed; if not, the message "NG!" is displayed.
Next, the system's RAM is checked. If the data written in the RAM is correct, the message "OK" is displayed; if not, the message "NG!" is displayed.
Number of message screens
SYSTEM ROM CHECK OK!
XX
SYSTEM RAM CHECK OK!
USER RAM 200 PAGES
BATTERY OK!
A
SYSTEM ROM CHECK OK!
XX
SYSTEM RAM CHECK OK!
USER RAM 200 PAGES
REPLACE THE BATTERY
B
If the RAM card is used as the user's message memory, the back-up battery of the RAM card is checked. Message A is displayed if the back-up battery is normal. If message B is displayed, replace the battery within 1 month.

Display Check

DIP Switch Settings

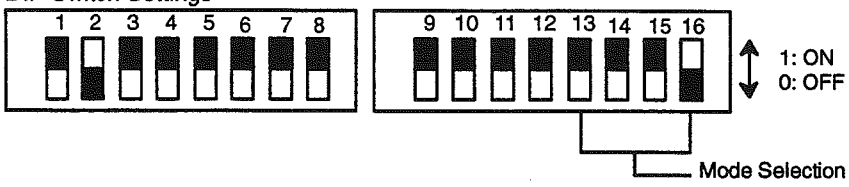

Display Screen

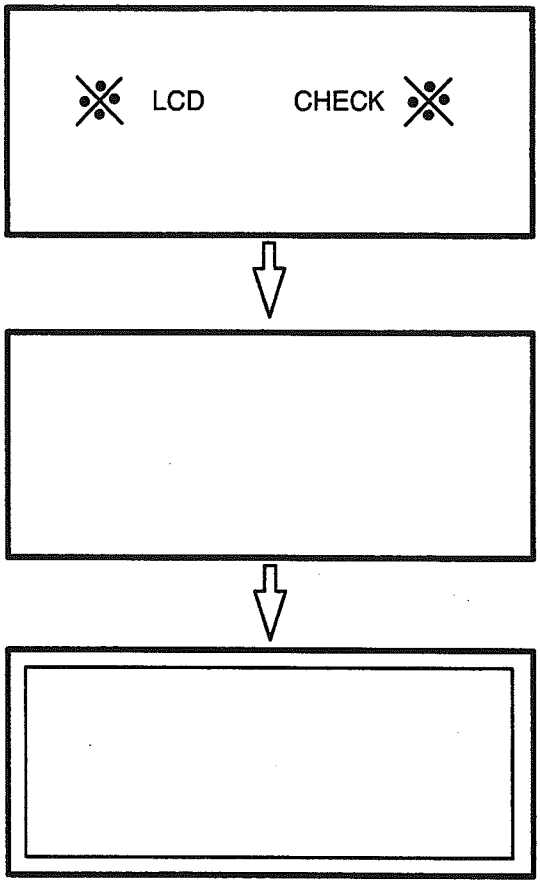

Upon executing the display check, this message is displayed for 2 seconds.

At this time, the dots on the screen blink in red, orange, and green in that order.

Next, one dot at the edge of the screen blinks in red, orange, and green in that order.

Connector Check

DIP Switch Settings

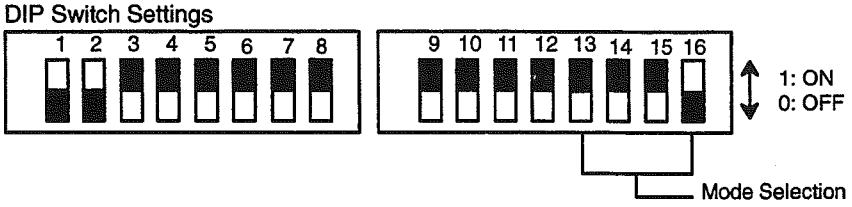

Display Screen

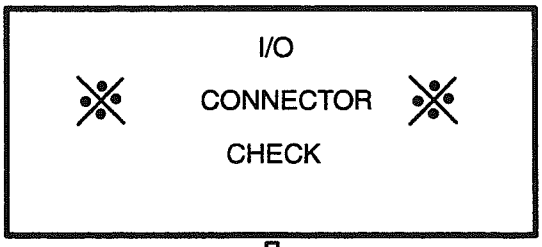

This message is displayed for the first 2 seconds.

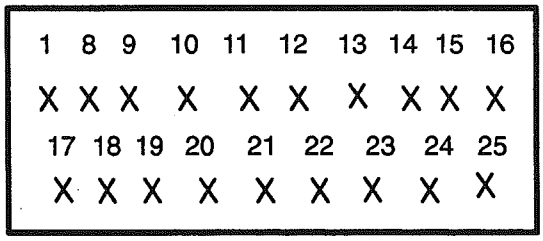

Connector pin status is displayed as shown. The numerals in the first and third rows indicate the connector's pin numbers. x in the figure indicates the signal level of each pin as 0 or 1, where 1 indicates high level and 0 indicates low level. Pin 17 repeatedly outputs the READY and BUSY signals from the Unit to an external device.

Serial Check

Before executing this check, connect the following cable to the Display Terminal Unit:

Connector: DSUB25P

Connection: Short-circuit pins 2, 3, 4 and 5.

Cable: Two terminal cables, each 3 mm dia. as shown below.

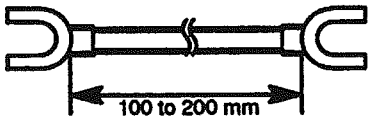

Connection: Short-circuit the SDA and RDA pins, and the SDB and RDB pins.

DIP Switch Settings

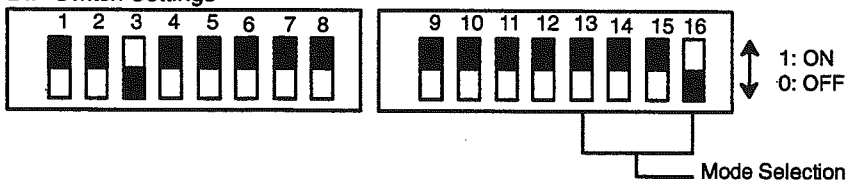

Display Screen

This message is displayed for the first 2 seconds.

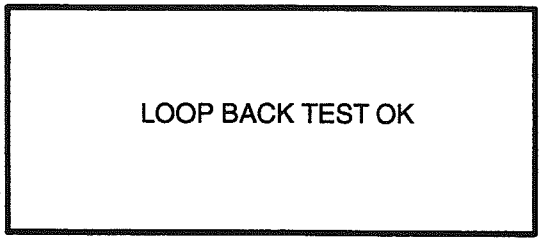

A Data output by the Display Terminal Unit is input back into the Unit. If the output and input data coinside, message A is displayed; otherwise, message B is displayed.

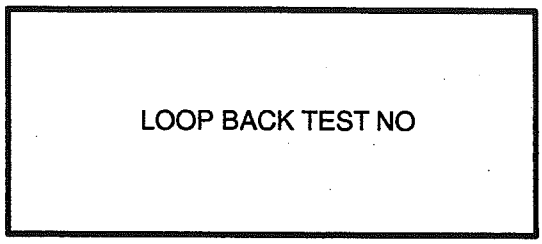

B

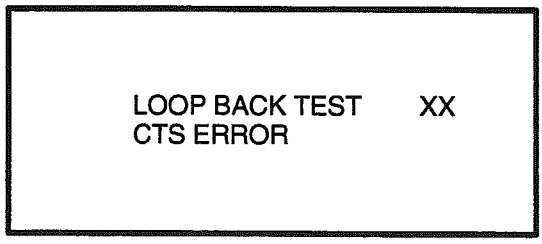

If either the RTS or CTS signal does not operate correctly, the message "CTS ERROR" is displayed.

Mode Switch Check

DIP Switch Settings

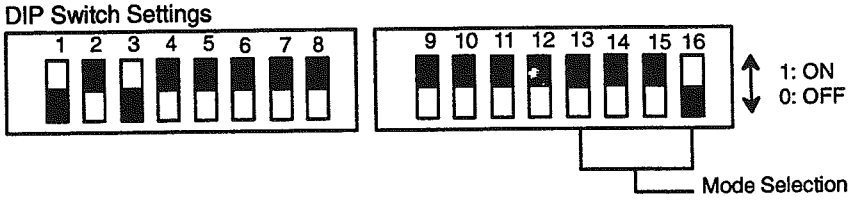

Display Screen

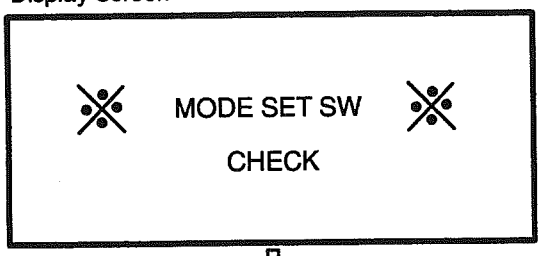

This message is displayed for the first 2 seconds.

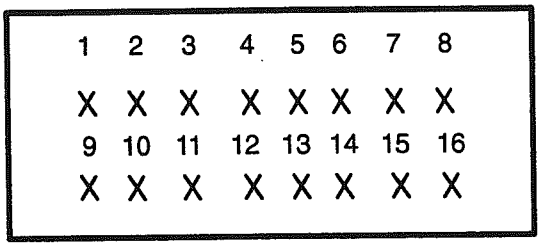

The status of each switch is displayed. The numerals on the first and third rows in the figure indicate the pin number of the switch. x indicates pin status as 1 or 0. 1 indicates the pin is ON; 0 indicates the pin is OFF.

Character Display

DIP Switch Settings

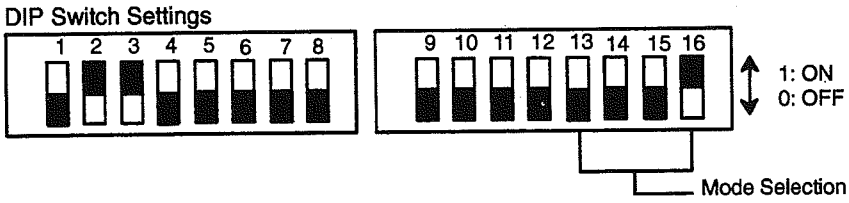

Display Screen

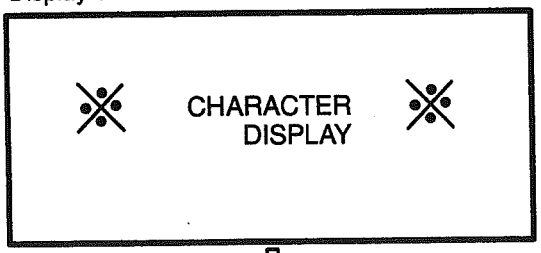

This message is displayed for the first 2 seconds.

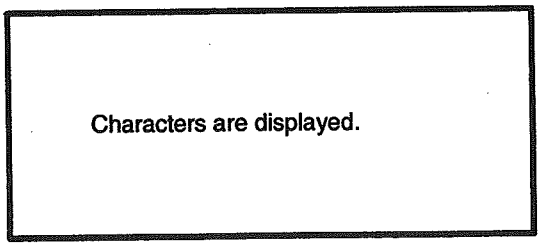

All characters (in 1/4, half-, and full-widths), except the user-defined characters, are displayed by page.

Message Display

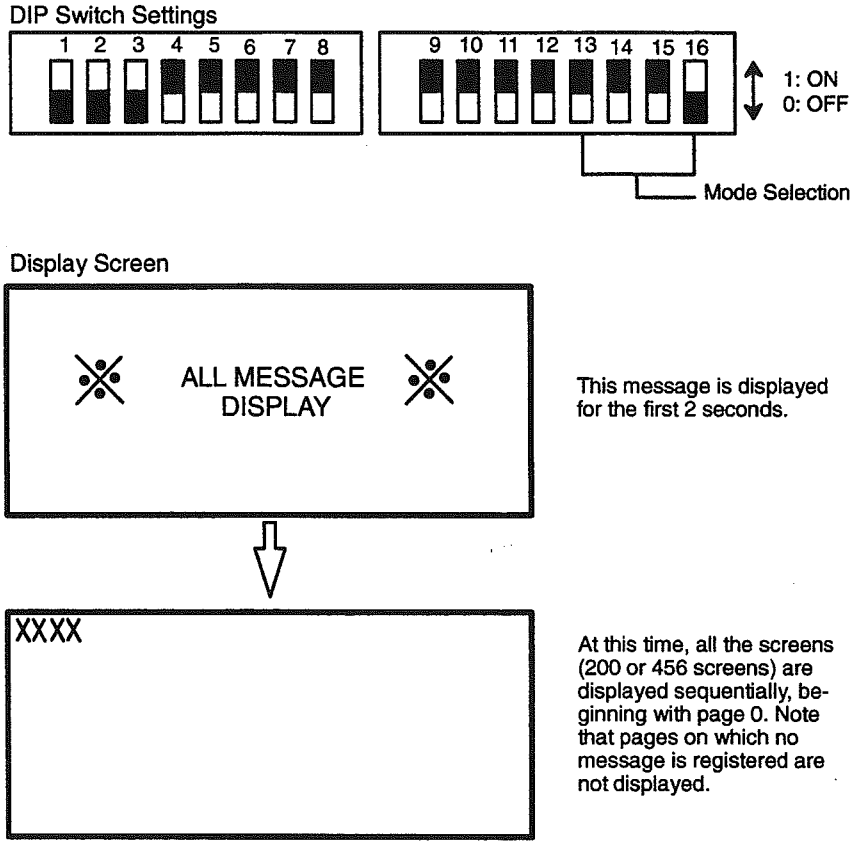

General Diagnosis

This checking operations above are automatically performed when pin 16 of the DIP switch is ON.

Maintenance

Clean the Display Unit using a soft dry cloth. Do not use thinner or alcohol, as deformation or discoloration of the Unit may occur.

Always transport the Unit in the box used for shipping from the factory to avoid inadvertent damage.

Appendix D
JIS Character Code

All code is in hexadecimal format.

Symbols

	0	1	2	3	4	5	6	7	8	9	A	B	C	D	E	F
212X			、	。	,	.	・	:	;	?	!	゛	゜	´	`	¨
213X	^	￣	_	ヽ	ヾ	ゝ	ゞ	〃	仝	々	〆	〇	―	―	-	／
214X	＼	～	∥	｜	…	‥	‘	’	“	”	（	）	〔	〕	［	］
215X	｛	｝	〈	〉	《	》	「	」	『	』	【	】	＋	－	±	×
216X	÷	＝	≠	＜	＞	≦	≧	∞	∴	♂	♀	°	′	″	℃	￥
217X	$	¢	£	%	#	&	*	@	§	☆	★	○	●	◎	◇	
222X		◆	□	■	△	▲	▽	▼	※	〒	→	←	↑	↓	〓	

English alphabet & numerals

	0	1	2	3	4	5	6	7	8	9	A	B	C	D	E	F
233X	0	1	2	3	4	5	6	7	8	9						
234X		A	B	C	D	E	F	G	H	I	J	K	L	M	N	O
235X	P	Q	R	S	T	U	V	W	X	Y	Z					
236X		a	b	c	d	e	f	g	h	i	j	k	l	m	n	o
237X	p	q	r	s	t	u	v	w	x	y	z					

Hiragana

	0	1	2	3	4	5	6	7	8	9	A	B	C	D	E	F
242X		ぁ	あ	ぃ	い	ぅ	う	ぇ	え	ぉ	お	か	が	き	ぎ	く
243X	ぐ	け	げ	こ	ご	さ	ざ	し	じ	す	ず	せ	ぜ	そ	ぞ	た
244X	だ	ち	ぢ	っ	つ	づ	て	で	と	ど	な	に	ぬ	ね	の	は
245X	ば	ぱ	ひ	び	ぴ	ふ	ぶ	ぷ	へ	べ	ぺ	ほ	ぼ	ぽ	ま	み
246X	む	め	も	ゃ	や	ゅ	ゆ	ょ	よ	ら	り	る	れ	ろ	ゎ	わ
247X	ゐ	ゑ	を	ん												

Katakana

	0	1	2	3	4	5	6	7	8	9	A	B	C	D	E	F
252X		ァ	ア	ィ	イ	ゥ	ウ	ェ	エ	ォ	オ	カ	ガ	キ	ギ	ク
253X	グ	ケ	ゲ	コ	ゴ	サ	ザ	シ	ジ	ス	ズ	セ	ゼ	ソ	ゾ	タ
254X	ダ	チ	ヂ	ッ	ツ	ヅ	テ	デ	ト	ド	ナ	ニ	ヌ	ネ	ノ	ハ
255X	バ	パ	ヒ	ビ	ピ	フ	ブ	プ	ヘ	ベ	ペ	ホ	ボ	ポ	マ	ミ
256X	ム	メ	モ	ャ	ヤ	ュ	ユ	ョ	ヨ	ラ	リ	ル	レ	ロ	ヮ	ワ
257X	ヰ	ヱ	ヲ	ン	ヴ	ヵ	ヶ									

Greek alphabet

	0	1	2	3	4	5	6	7	8	9	A	B	C	D	E	F
262X		Α	Β	Γ	Δ	Ε	Ζ	Η	Θ	Ι	Κ	Λ	Μ	Ν	Ξ	Ο
263X	Π	Ρ	Σ	Τ	Υ	Φ	Χ	Ψ	Ω							
264X		α	β	γ	δ	ε	ζ	η	θ	ι	κ	λ	μ	ν	ξ	ο
265X	π	ρ	σ	τ	υ	φ	χ	ψ	ω							

Russian alphabet

	0	1	2	3	4	5	6	7	8	9	A	B	C	D	E	F
272X		А	Б	В	Г	Д	Е	Ё	Ж	З	И	Й	К	Л	М	Н
273X	О	П	Р	С	Т	У	Ф	Х	Ц	Ч	Ш	Щ	Ъ	Ы	Ь	Э
274X	Ю	Я														
275X		а	б	в	г	д	е	ё	ж	з	и	й	к	л	м	н
276X	о	п	р	с	т	у	ф	х	ц	ч	ш	щ	ъ	ы	ь	э
277X	ю	я														

A

	0	1	2	3	4	5	6	7	8	9	A	B	C	D	E	F
302X		亜	唖	娃	阿	哀	愛	挨	姶	逢	葵	茜	穐	悪	握	渥
303X	旭	葦	芦	鯵	梓	圧	斡	扱	宛	姐	虻	飴	絢	綾	鮎	或
304X	粟	袷	安	庵	按	暗	案	闇	鞍	杏						

I

	0	1	2	3	4	5	6	7	8	9	A	B	C	D	E	F
304X											以	伊	位	依	偉	囲
305X	夷	委	威	尉	惟	意	慰	易	椅	為	畏	異	移	維	緯	胃
306X	萎	衣	謂	違	遺	医	井	亥	域	育	郁	磯	一	壱	溢	逸
307X	稲	茨	芋	鰯	允	印	咽	員	因	姻	引	飲	淫	胤	蔭	
312X		院	陰	隠	韻	吋										

U

	0	1	2	3	4	5	6	7	8	9	A	B	C	D	E	F
312X							右	宇	鳥	羽	迂	雨	卯	鵜	窺	丑
313X	碓	臼	渦	嘘	唄	欝	蔚	鰻	姥	厩	浦	瓜	閏	噂	云	運
314X	雲															

E

	0	1	2	3	4	5	6	7	8	9	A	B	C	D	E	F
314X		荏	餌	叡	営	嬰	影	映	曳	栄	永	泳	洩	瑛	盈	穎
315X	頴	英	衛	詠	鋭	液	疫	益	駅	悦	謁	越	閲	榎	厭	円
316X	園	堰	奄	宴	延	怨	掩	援	沿	演	炎	焔	煙	燕	猿	縁
317X	艶	苑	薗	遠	鉛	鴛	塩									

O

	0	1	2	3	4	5	6	7	8	9	A	B	C	D	E	F
317X								於	汚	甥	凹	央	奥	往	応	
322X		押	旺	横	欧	殴	王	翁	襖	鴬	鴎	黄	岡	沖	荻	億
323X	屋	憶	臆	桶	牡	乙	俺	卸	恩	温	穏	音				

KA

	0	1	2	3	4	5	6	7	8	9	A	B	C	D	E	F
323X													下	化	仮	何

continued on next page

KA

	0	1	2	3	4	5	6	7	8	9	A	B	C	D	E	F
324X	伽	価	佳	加	可	嘉	夏	嫁	家	寡	科	暇	果	架	歌	河
325X	火	珂	禍	禾	稼	箇	花	苛	茄	荷	華	菓	蝦	課	嘩	貨
326X	迦	過	霞	蚊	俄	峨	我	牙	画	臥	芽	蛾	賀	雅	餓	駕
327X	介	会	解	回	塊	壊	廻	快	怪	悔	恢	懐	戒	拐	改	
332X		魁	晦	械	海	灰	界	皆	絵	芥	蟹	開	階	貝	凱	劾
333X	外	咳	害	崖	慨	概	涯	碍	蓋	街	該	諧	骸	浬	慨	蛙
334X	垣	柿	蛎	鈎	劃	嚇	各	廓	拡	撹	格	核	殻	獲	確	穫
335X	覚	角	赫	較	郭	閣	隔	革	学	岳	楽	額	顎	掛	笠	樫
336X	橿	梶	鰕	潟	割	喝	恰	括	活	渇	滑	葛	褐	轄	且	鰹
337X	叶	椛	樺	鞄	株	兜	竈	蒲	釜	鎌	噛	鴨	栢	茅	萱	
342X		粥	刈	苅	瓦	乾	侃	冠	寒	刊	勘	勧	巻	喚	堪	姦
343X	完	官	寛	干	幹	患	感	慣	憾	換	敢	柑	桓	棺	款	歓
344X	汗	漢	灌	灌	環	甘	監	看	竿	管	簡	緩	缶	翰	肝	艦
345X	莞	観	諌	貫	還	鑑	間	関	陥	韓	館	舘	丸	含	岸	
346X	巌	玩	癌	眼	岩	翫	贋	雁	頑	顔	願					

KI

	0	1	2	3	4	5	6	7	8	9	A	B	C	D	E	F
346X												企	伎	危	喜	器
347X	基	奇	嬉	寄	岐	希	幾	忌	揮	机	旗	既	期	棋	棄	
352X		機	帰	毅	気	汽	畿	祈	季	稀	紀	徽	規	記	貴	起
353X	軌	輝	飢	騎	鬼	亀	偽	儀	妓	宜	戯	技	擬	欺	犠	疑
354X	祇	義	蟻	宜	儀	掬	菊	鞠	吉	吃	喫	桔	橘	詰	砧	杵
355X	黍	却	客	脚	虐	逆	丘	久	仇	休	及	吸	宮	弓	急	救
356X	朽	求	汲	泣	灸	球	究	窮	笈	級	糾	給	旧	牛	去	居
357X	巨	拒	拠	挙	渠	虚	許	距	鋸	漁	禦	魚	亨	享	京	
362X		供	侠	僑	兇	競	共	凶	協	匡	卿	叫	喬	境	峡	強
363X	彊	怯	恐	恭	挟	教	橋	況	狂	狭	矯	胸	脅	興	蕎	郷
364X	鏡	響	叫	驚	仰	凝	堯	暁	業	局	曲	極	玉	桐	粁	僅
365X	勤	均	巾	錦	斤	欣	欽	琴	禁	禽	筋	緊	芹	菌	衿	襟
366X	謹	近	金	吟	銀											

KU

	0	1	2	3	4	5	6	7	8	9	A	B	C	D	E	F
366X						九	倶	句	区	狗	玖	矩	苦	躯	駆	駈
367X	駒	具	愚	虞	喰	空	偶	寓	遇	隅	串	櫛	釧	屈		
372X		掘	窟	沓	靴	窮	窪	熊	隈	粂	栗	繰	桑	鍬	勲	君
373X	薫	訓	群	軍	郡											

KE

	0	1	2	3	4	5	6	7	8	9	A	B	C	D	E	F
373X						卦	袈	祁	係	傾	刑	兄	啓	圭	珪	型
374X	契	形	径	恵	慶	慧	憩	掲	携	敬	景	桂	渓	畦	稽	系
375X	経	継	繋	罫	茎	荊	蛍	計	詣	警	軽	頸	鶏	芸	迎	鯨
376X	劇	戟	撃	激	隙	桁	傑	欠	決	潔	穴	結	血	訣	月	件
377X	倹	倦	健	兼	券	剣	喧	圏	堅	嫌	建	憲	懸	拳	倦	
382X		検	権	牽	犬	献	研	硯	絹	県	肩	見	謙	賢	軒	遣
383X	鍵	険	顕	験	鹸	元	原	厳	幻	弦	減	源	玄	現	絃	舷
384X	言	諺	限													

KO

	0	1	2	3	4	5	6	7	8	9	A	B	C	D	E	F
384X				乎	個	古	呼	固	姑	孤	己	庫	弧	戸	故	枯
385X	湖	狐	糊	袴	股	胡	菰	虎	誇	跨	鈷	雇	顧	鼓	五	互
386X	伍	午	呉	吾	娯	後	御	悟	梧	檎	瑚	碁	語	誤	護	醐
387X	乞	鯉	交	佼	侯	候	倖	光	公	功	効	勾	厚	口	向	
392X		后	喉	坑	垢	好	孔	孝	宏	工	巧	巷	幸	広	庚	康
393X	弘	恒	慌	抗	拘	控	攻	昂	晃	更	杭	校	梗	構	江	洪
394X	浩	港	溝	甲	皇	硬	稿	糠	紅	紘	絞	綱	耕	考	肯	肱
395X	腔	膏	航	荒	行	衡	講	貢	購	郊	酵	鉱	礦	鋼	閤	降
396X	項	香	高	鴻	剛	劫	号	合	壕	拷	濠	豪	轟	麹	克	刻
397X	告	国	穀	酷	鵠	黒	獄	漉	腰	甑	忽	惚	骨	狛	込	
3A2X		此	頃	今	困	坤	墾	婚	恨	懇	昏	昆	根	梱	混	痕
3A3X	紺	艮	魂													

SA

	0	1	2	3	4	5	6	7	8	9	A	B	C	D	E	F
3A3X				些	佐	叉	唆	嵯	左	差	査	沙	瑳	砂	詐	鎖
3A4X	裟	坐	座	挫	債	催	再	最	哉	塞	妻	宰	彩	才	採	栽
3A5X	歳	済	災	采	犀	砕	砦	祭	斎	細	菜	裁	載	際	剤	在
3A6X	材	罪	財	冴	坂	阪	堺	榊	肴	咲	崎	埼	碕	鷺	作	削
3A7X	昨	搾	昨	朔	柵	窄	策	索	錯	桜	鮭	笹	匙	冊	刷	
3B2X		察	拶	撮	擦	札	殺	薩	雑	皐	鯖	捌	錆	鮫	皿	晒
3B3X	三	傘	参	山	惨	撒	散	桟	燦	珊	産	算	纂	蚕	讃	賛
3B4X	酸	餐	斬	暫	残											

SI

	0	1	2	3	4	5	6	7	8	9	A	B	C	D	E	F
3B4X						仕	仔	伺	使	刺	司	史	嗣	四	士	始
3B5X	姉	姿	子	屍	市	師	志	思	指	支	孜	斯	施	旨	枝	止
3B6X	死	氏	獅	社	私	糸	紙	紫	肢	脂	至	視	詞	詩	試	誌
3B7X	諮	資	賜	雌	飼	歯	事	似	侍	児	字	寺	慈	持	時	
3C2X		次	滋	治	爾	璽	痔	磁	示	而	耳	自	蒔	辞	汐	鹿
3C3X	式	識	鴫	竺	軸	宍	雫	七	叱	執	失	嫉	室	悉	湿	漆
3C4X	疾	質	実	蔀	篠	偲	柴	芝	屡	蔗	締	舎	写	射	捨	赦
3C5X	斜	煮	社	紗	者	謝	車	遮	蛇	邪	借	勺	尺	杓	灼	爵
3C6X	酌	釈	錫	若	寂	弱	惹	主	取	守	手	朱	殊	狩	珠	種
3C7X	腫	趣	酒	首	儒	受	呪	寿	授	樹	綬	需	囚	収	周	
3D2X		宗	就	州	修	愁	拾	洲	秀	秋	終	繍	習	臭	舟	蒐
3D3X	衆	襲	讐	蹴	輯	週	酋	酬	集	醜	什	住	充	十	従	戎
3D4X	柔	汁	渋	獣	縦	重	銃	叔	夙	宿	淑	祝	縮	粛	塾	熟
3D5X	出	術	述	俊	峻	春	瞬	竣	舜	駿	准	循	旬	楯	殉	淳
3D6X	準	潤	盾	純	巡	遵	醇	順	処	初	所	暑	曙	渚	庶	緒
3D7X	署	書	薯	藷	諸	助	叙	女	序	徐	恕	鋤	除	傷	償	
3E2X		勝	匠	升	召	哨	商	唱	嘗	奨	妾	娼	宵	将	小	少
3E3X	尚	庄	床	廠	彰	承	抄	招	掌	捷	昇	昌	昭	晶	松	梢
3E4X	樟	礁	沼	消	渉	湘	焼	焦	照	症	省	硝	礁	祥	称	章
3E5X	笑	粧	紹	肖	菖	蒋	蕉	衝	裳	訟	証	詔	詳	象	賞	醤

continued on next page

SI

	0	1	2	3	4	5	6	7	8	9	A	B	C	D	E	F
3E6X	鉦	鐘	鐘	障	鞘	上	丈	丞	乗	冗	剰	城	場	壌	嬢	常
3E7X	情	擾	条	杖	浄	状	畳	穣	蒸	譲	醸	錠	嘱	埴	飾	
3F2X		拭	植	殖	燭	織	職	色	触	食	蝕	辱	尻	伸	信	侵
3F3X	唇	娠	寝	審	心	慎	振	新	晋	森	榛	浸	深	申	麦	真
3F4X	神	秦	紳	臣	芯	薪	親	診	身	辛	進	針	震	人	仁	刃
3F5X	塵	壬	尋	甚	尽	腎	訊	迅	陣	靱						

SU

	0	1	2	3	4	5	6	7	8	9	A	B	C	D	E	F
3F5X											筍	殉	須	酢	図	厨
3F6X	逗	吹	垂	帥	推	水	炊	睡	粋	翠	衰	遂	酔	錐	錘	随
3F7X	瑞	髄	崇	嵩	数	枢	趨	雛	据	杉	椙	菅	頗	雀	裾	
402X		澄	摺	寸												

SE

	0	1	2	3	4	5	6	7	8	9	A	B	C	D	E	F
402X					世	瀬	畝	是	凄	制	勢	姓	征	性	成	政
403X	整	星	晴	棲	栖	正	清	牲	生	盛	精	聖	声	製	西	誠
404X	誓	請	逝	醒	青	静	斉	税	脆	隻	席	惜	戚	斥	昔	析
405X	石	積	籍	績	脊	責	赤	跡	蹟	碩	切	拙	接	摂	折	設
406X	窃	節	説	雪	絶	舌	蝉	仙	先	千	占	宣	専	尖	川	戦
407X	扇	撰	栓	栴	泉	浅	洗	染	潜	煎	煽	施	穿	箭	線	
412X		繊	羨	腺	舛	船	薦	詮	賤	践	選	遷	銭	銑	閃	鮮
413X	前	善	漸	然	全	禅	繕	膳	糎							

SO

	0	1	2	3	4	5	6	7	8	9	A	B	C	D	E	F
413X										噌	塑	岨	措	曾	曽	楚
414X	狙	疏	踈	礎	祖	租	粗	素	組	蘇	訴	阻	遡	鼠	僧	創
415X	双	叢	倉	喪	壮	奏	爽	宋	層	匝	惣	想	捜	掃	挿	掻
416X	操	早	曹	巣	槍	槽	漕	燥	争	痩	相	窓	糟	総	綜	聡
417X	草	荘	葬	蒼	藻	装	走	送	遭	鎗	霜	騒	像	増	憎	
422X		臓	蔵	贈	造	促	側	則	即	息	捉	束	測	足	速	俗

continued on next page

SO

	0	1	2	3	4	5	6	7	8	9	A	B	C	D	E	F
423X	属	賊	族	続	卒	袖	其	揃	存	孫	尊	損	村	遜		

TA

	0	1	2	3	4	5	6	7	8	9	A	B	C	D	E	F
423X															他	多
424X	太	汰	詫	唾	堕	妥	惰	打	柁	舵	楕	陀	駄	騨	体	堆
425X	対	耐	岱	帯	待	怠	態	戴	替	泰	滞	胎	腿	苔	袋	貸
426X	退	逮	隊	黛	鯛	代	台	大	第	醍	題	鷹	滝	瀧	卓	啄
427X	宅	托	択	拓	沢	濯	琢	託	鐸	濁	諾	茸	凧	蛸	只	
432X		叩	但	達	辰	奪	脱	巽	竪	辿	棚	谷	狸	鱈	樽	誰
433X	丹	単	嘆	坦	担	深	旦	歎	淡	湛	炭	短	端	箪	綻	耽
434X	胆	蛋	誕	鍛	団	壇	弾	断	暖	檀	段	男	談			

TI

	0	1	2	3	4	5	6	7	8	9	A	B	C	D	E	F
434X														値	知	地
435X	弛	恥	智	池	痴	稚	置	致	蜘	遅	馳	築	畜	竹	筑	蓄
436X	逐	秩	窒	茶	嫡	着	中	仲	宙	忠	抽	昼	柱	注	虫	衷
437X	註	酎	鋳	駐	樗	瀦	猪	苧	著	貯	丁	兆	凋	喋	寵	
442X		帖	帳	庁	弔	張	彫	徴	懲	挑	暢	朝	潮	牒	町	眺
443X	聴	脹	腸	蝶	調	諜	超	跳	銚	長	頂	鳥	勅	捗	直	朕
444X	沈	珍	賃	鎮	陳											

TSU

	0	1	2	3	4	5	6	7	8	9	A	B	C	D	E	F
444X						津	墜	椎	槌	追	鎚	痛	通	塚	栂	掴
445X	槻	佃	漬	柘	辻	蔦	綴	鍔	椿	潰	坪	壺	嬬	紬	爪	吊
446X	釣	鶴														

TE

	0	1	2	3	4	5	6	7	8	9	A	B	C	D	E	F
446X			事	低	停	偵	剃	貞	呈	堤	定	帝	底	庭	延	第
447X	悌	抵	挺	提	梯	汀	碇	禎	程	締	艇	訂	諦	蹄	逓	
452X		𠮟	鄭	釘	鼎	泥	摘	擢	敵	滴	的	笛	適	鏑	溺	哲

continued on next page

TE

	0	1	2	3	4	5	6	7	8	9	A	B	C	D	E	F
453X	徹	撤	轍	迭	鉄	典	塡	天	展	店	添	纏	甜	貼	転	顚
454X	点	伝	殿	澱	田	電										

TO

	0	1	2	3	4	5	6	7	8	9	A	B	C	D	E	F
454X							兎	吐	堵	塗	妬	屠	徒	斗	杜	渡
455X	登	菟	賭	途	都	鍍	砥	礪	努	度	土	奴	怒	倒	党	冬
456X	凍	刀	唐	塔	塘	套	宕	島	嶋	悼	投	搭	東	桃	梼	棟
457X	盗	淘	湯	涛	灯	燈	当	痘	祷	等	答	筒	糖	統	到	
462X		董	蕩	藤	討	謄	豆	踏	逃	透	鐙	陶	頭	騰	闘	働
463X	動	同	堂	導	憧	撞	洞	瞳	童	胴	萄	道	銅	峠	鴇	匿
464X	得	徳	濤	特	督	禿	篤	毒	独	読	栃	橡	凸	突	椴	届
465X	鳶	苫	寅	酉	瀞	噸	屯	惇	敦	沌	豚	遁	頓	呑	曇	鈍

NA

	0	1	2	3	4	5	6	7	8	9	A	B	C	D	E	F
466X	奈	那	内	乍	凪	薙	謎	灘	捺	鍋	楢	馴	縄	畷	南	楠
467X	軟	難	汝													

NI

	0	1	2	3	4	5	6	7	8	9	A	B	C	D	E	F
467X				二	尼	弐	邇	匂	賑	肉	虹	廿	日	乳	入	
472X		如	尿	韮	任	妊	忍	認								

NU

	0	1	2	3	4	5	6	7	8	9	A	B	C	D	E	F
472X									濡							

NE

	0	1	2	3	4	5	6	7	8	9	A	B	C	D	E	F
472X										禰	祢	寧	葱	猫	熱	年
473X	念	捻	撚	燃	粘											

NO

	0	1	2	3	4	5	6	7	8	9	A	B	C	D	E	F
473X						乃	廼	之	埜	嚢	悩	濃	納	能	脳	膿
474X	農	覗	蚤													

HA

	0	1	2	3	4	5	6	7	8	9	A	B	C	D	E	F
474X				巴	把	播	覇	杷	波	派	琶	破	婆	罵	芭	馬
475X	俳	廃	拝	排	敗	杯	盃	牌	背	肺	輩	配	倍	培	媒	梅
476X	楳	煤	狽	買	売	賠	陪	這	蝿	秤	矧	萩	伯	剝	博	拍
477X	柏	泊	白	箔	粕	舶	薄	迫	曝	漠	爆	縛	莫	駁	麦	
482X		函	箱	硲	箸	肇	筈	櫨	幡	肌	畑	畠	八	鉢	溌	発
483X	醗	髪	伐	罰	抜	筏	閥	鳩	噺	塙	蛤	隼	伴	判	半	反
484X	叛	帆	搬	斑	板	氾	汎	版	犯	班	畔	繁	般	藩	販	範
485X	釆	煩	頒	飯	挽	晩	番	盤	磐	蕃	蛮					

HI

	0	1	2	3	4	5	6	7	8	9	A	B	C	D	E	F
485X												匪	卑	否	妃	庇
486X	彼	悲	扉	批	披	斐	比	泌	疲	皮	碑	秘	緋	罷	肥	被
487X	誹	費	避	非	飛	樋	簸	備	尾	微	枇	毘	琵	眉	美	
492X		鼻	柊	稗	匹	疋	髭	彦	膝	菱	肘	弼	必	畢	筆	逼
493X	檜	姫	媛	紐	百	謬	彼	彦	膝	菱	肘	弼	必	畢	筆	逼
494X	廟	描	病	秒	苗	錨	鼻	蒜	蛭	鰭	品	彬	斌	浜	瀕	貧
495X	賓	頻	敏	瓶												

HU

	0	1	2	3	4	5	6	7	8	9	A	B	C	D	E	F
495X					不	付	埠	夫	婦	富	冨	布	府	怖	扶	敷
496X	斧	普	浮	父	符	腐	膚	芙	譜	負	賦	赴	阜	附	侮	撫
497X	武	舞	葡	蕪	部	封	楓	風	葺	踏	伏	副	復	幅	服	
4A2X		福	腹	複	覆	淵	弗	払	沸	仏	物	鮒	分	吻	噴	墳
4A3X	憤	扮	焚	奮	粉	糞	紛	雰	文	聞						

HE

	0	1	2	3	4	5	6	7	8	9	A	B	C	D	E	F
4A3X											丙	併	兵	塀	幣	平
4A4X	弊	柄	並	蔽	閉	陛	米	頁	僻	壁	癖	碧	別	瞥	蔑	箆
4A5X	偏	変	片	篇	編	辺	返	遍	便	勉	娩	弁	鞭			

HO

	0	1	2	3	4	5	6	7	8	9	A	B	C	D	E	F
4A5X														保	舗	鋪
4A6X	圃	捕	歩	甫	補	輔	穂	募	墓	慕	戊	暮	母	簿	菩	倣
4A7X	棒	包	呆	報	奉	宝	峰	峯	崩	庖	抱	捧	放	方	朋	
4B2X		法	泡	烹	砲	縫	胞	芳	萌	蓬	蜂	褒	訪	豊	邦	鋒
4B3X	飽	鳳	鵬	乏	亡	傍	剖	坊	妨	帽	忘	忙	房	暴	望	某
4B4X	棒	冒	紡	肪	膨	謀	貌	貿	鉾	防	吠	頬	北	僕	卜	墨
4B5X	撲	朴	牧	睦	穆	釦	勃	没	殆	堀	幌	奔	本	翻	凡	盆

MA

	0	1	2	3	4	5	6	7	8	9	A	B	C	D	E	F
4B6X	摩	磨	魔	麻	埋	妹	味	枚	毎	哩	槙	幕	膜	枕	鮪	柾
4B7X	鰻	桝	亦	俣	又	抹	末	沫	迄	儘	繭	麿	万	慢	満	
4C2X		漫	蔓													

MI

	0	1	2	3	4	5	6	7	8	9	A	B	C	D	E	F
4C2X				味	未	魅	巳	箕	岬	密	蜜	湊	蓑	稔	脈	妙
4C3X	粍	民	眠													

MU

	0	1	2	3	4	5	6	7	8	9	A	B	C	D	E	F
4C3X				務	夢	無	牟	矛	霧	鵡	椋	婿	娘			

ME

	0	1	2	3	4	5	6	7	8	9	A	B	C	D	E	F
4C3X														冥	名	命
4C4X	明	盟	迷	銘	鳴	姪	牝	滅	免	棉	綿	緬	面	麺		

MO

	0	1	2	3	4	5	6	7	8	9	A	B	C	D	E	F
4C4X															摸	模
4C5X	茂	妄	盂	毛	猛	盲	網	耗	蒙	儲	木	黙	目	杢	勿	餅
4C6X	尤	戻	籾	貰	問	悶	紋	門	匁							

YA

	0	1	2	3	4	5	6	7	8	9	A	B	C	D	E	F
4C6X										也	冶	夜	爺	耶	野	弥
4C7X	矢	厄	役	約	薬	訳	躍	靖	柳	薮	鑓					

YU

	0	1	2	3	4	5	6	7	8	9	A	B	C	D	E	F
4C7X												愉	愈	油	癒	
4D2X		諭	輸	唯	佑	優	勇	友	宥	幽	悠	憂	揖	有	祐	湧
4D3X	涌	猶	猷	由	祐	裕	誘	遊	邑	郵	雄	融	夕			

YO

	0	1	2	3	4	5	6	7	8	9	A	B	C	D	E	F
4D3X														予	余	与
4D4X	誉	輿	預	傭	幼	妖	容	庸	揚	揺	擁	曜	楊	様	洋	溶
4D5X	熔	用	窯	羊	耀	葉	蓉	要	謡	踊	遙	陽	養	慾	抑	欲
4D6X	沃	浴	翌	翼	淀											

RA

	0	1	2	3	4	5	6	7	8	9	A	B	C	D	E	F
4D6X						羅	螺	裸	来	莱	頼	雷	洛	絡	落	酪
4D7X	乱	卵	嵐	欄	濫	藍	蘭	覧								

RI

	0	1	2	3	4	5	6	7	8	9	A	B	C	D	E	F
4D7X									利	吏	履	李	梨	理	璃	
4E2X		痢	裏	裡	里	離	陸	律	率	立	葎	掠	略	劉	流	溜
4E3X	琉	留	硫	粒	隆	竜	龍	侶	慮	旅	虜	了	亮	僚	両	凌
4E4X	寮	料	梁	涼	猟	療	瞭	稜	糧	良	諒	遼	量	陵	領	力
4E5X	緑	倫	厘	林	淋	燐	琳	臨	輪	隣	鱗	瞭				

RU

	0	1	2	3	4	5	6	7	8	9	A	B	C	D	E	F
4E5X													瑠	塁	涙	累
4E6X	類															

RE

	0	1	2	3	4	5	6	7	8	9	A	B	C	D	E	F
4E6X		令	伶	例	冷	励	嶺	怜	玲	礼	苓	鈴	隷	零	霊	麗
4E7X	齢	暦	歴	列	劣	烈	裂	廉	恋	憐	漣	煉	簾	練	聯	
4F2X		蓮	連	錬												

RO

	0	1	2	3	4	5	6	7	8	9	A	B	C	D	E	F
4F2X					呂	魯	櫓	炉	賂	路	露	労	婁	廊	弄	朗
4F3X	楼	榔	浪	漏	牢	狼	籠	老	聾	蝋	郎	六	麓	禄	肋	録
4F4X	論															

WA

	0	1	2	3	4	5	6	7	8	9	A	B	C	D	E	F
4F4X		倭	和	話	歪	賄	脇	惑	枠	鷲	亙	亘	鰐	詫	藁	蕨
4F5X	椀	湾	碗	腕												

Shift JIS Code

JIS	SJIS	0123	4567	89AB	CDEF	0123	4567	89AB	CDEF
Level 1	8140	、。，	．・：；	？！゛゜	´｀¨＾	￣＿ヽヾ	ゝゞ〃仝	々〆〇ー	―・＼
	8160	～‖｜…	‥‘’“”	（）〔〕	［］｛｝	〈〉《》	「」『』	【】＋	－±×
	8180	÷＝≠＜	＞≦≧∞	∴♂♀°	′″℃¥	＄¢£％	＃＆＊＠	§☆★○	●◎◇◆
Level 2	81A0	□■△▲	▽▼※〒	→←↑↓	〓				
	81C0								
	81E0								
Level 3	8240				0	1234	5678	9	
	8260	ABCD	EFGH	IJKL	MNOP	QRST	UVWX	YZ	
	8280	abc	defg	hijk	lmno	pqrs	tuvw	xyz	ぁ
	82A0	あぃいぅ	うぇえぉ	おかがき	ぎくぐけ	げこごさ	ざしじす	ずせぜそ	ぞただち
Level 4	82C0	ぢっつづ	てでとど	なにぬね	のはばぱ	ひびぴふ	ぶぷへべ	べぺほぼぽ	まみむめ
	82E0	もゃやゅ	ゆょよら	りるれろ	ゎわゐゑ	をん			
Level 5	8340	ァアィイ	ゥウェエ	ォオカガ	キギクグ	ケゲコゴ	サザシジ	スズセゼ	ソゾタダ
	8360	チヂッツ	ヅテデト	ドナニヌ	ネノハバ	パヒビピ	フブプヘ	ベペホボ	ポマミム
	8380	ムメモャ	ヤュユョ	ヨラリル	レロヮワ	ヰヱヲン	ヴヵヶ		Α
	83A0	ΒΓΔΕ	ΖΗΘΙ	ΚΛΜΝ	ΞΟΠΡ	ΣΤΥΦ	ΧΨΩ		α
Level 6	83C0	βγδε	ζηθι	κλμν	ξοπρ	στυφ	χψω		
	83E0								
Level 7	8440	АБВГ	ДЕЁЖ	ЗИЙК	ЛМНО	ПРСТ	УФХЦ	ЧШЩЪ	ЫЬЭЮ
	8460	Я				абвг	деёж	зийк	лмно
	8480	опрс	туфх	цчшщ	ъыьэ	юя			
Level 8	84A0								
	84C0								
	84E0								
Level 9	8540								
	8560								
	8580								
Level 10	85A0								
	85C0								
	85E0								
Level 11	8640								
	8660								
	8680								
Level 12	86A0	！＃	＄％＆	０＊＋	，－．／	0123	4567	89:;	<=>?
	86C0	@ABC	DEFG	HIJK	LMNO	PQRS	TUVW	XYZ［	¥］＾＿
	86E0	｀ａｂ	ｃｄｅｆ	ｇｈｉｊ	ｋｌｍｎ	ｏｐｑｒ	ｓｔｕｖ	ｘｙｚ｛	｜｝￣

JIS	SJIS	0123	4567	89AB	CDEF	0123	4567	89AB	CDEF
	8740	[illegible]	[illegible]	[illegible]	[illegible]	[illegible]	[illegible]	[illegible]	[illegible]
Level 13	8760	[illegible]	[illegible]	[illegible]	[illegible]	[illegible]	[illegible]	[illegible]	[illegible]
	8780	Half-width character area							
	87A0								
Level 14	87C0								
	87E0								
	8840	General character area							
Level 15	8860								
	8880								亜
	88A0	啞娃阿哀	愛挨姶逢	葵茜穐悪	握渥旭葦	芦鯵梓圧	斡扱宛姐	虻飴絢綾	鮎或粟袷
Level 16	88C0	安庵按暗	案闇鞍杏	以伊位依	偉囲夷委	威尉惟意	慰易椅為	畏異移維	緯胃萎衣
	88E0	謂違遺医	井亥域育	郁磯一壱	溢逸稲茨	芋鰯允印	咽員因姻	引飲淫胤	蔭
	8940	院陰隠韻	吋右宇烏	羽迂雨卯	鵜窺丑碓	臼渦嘘唄	欝蔚鰻姥	厩浦瓜閏	噂云運雲
Level 17	8960	荏餌叡営	嬰影映曳	栄永泳洩	瑛盈穎頴	英衛詠鋭	液疫益駅	悦謁越閲	榎厭円
	8980	園堰奄宴	延怨掩援	沿演炎焔	煙燕猿縁	艶苑薗遠	鉛鴛塩於	汚甥凹央	奥往応押
	89A0	旺横欧殴	王翁襖鴬	鷗黄岡沖	荻億屋憶	臆桶牡乙	俺卸恩温	穏音下化	仮何伽価
Level 18	89C0	佳加可嘉	夏嫁家寡	科暇果架	歌河火珂	禍禾稼箇	花苛茄荷	華菓蝦課	嘩貨迦過
	89E0	霞蚊俄峨	我牙画臥	芽蛾賀雅	餓駕介会	解回塊壊	廻快怪悔	恢懐戒拐	改
	8A40	魁晦械海	灰界皆絵	芥蟹開階	貝凱劾外	咳害崖慨	概涯碍蓋	街該鎧骸	浬馨蛙垣
Level 20	8A60	柿蛎鈎劃	嚇各廓拡	撹格核殻	獲確穫覚	角赫較郭	閣隔革学	岳楽額顎	掛笠樫
	8A80	橿梶鰍潟	割喝恰括	活渇滑葛	褐轄且鰹	叶椛樺鞄	株兜竃蒲	釜鎌噛鴨	栢茅萱粥
	8AA0	刈苅瓦乾	侃冠寒刊	勘勧巻喚	堪姦完官	寛千幹患	感慣憾換	敢柑桓棺	款歓汗漢
Level 21	8AC0	澗潅環甘	監看竿管	簡緩缶翰	肝艦莞観	諫貫還鑑	間閑関陥	韓館舘丸	含岸巌玩
	8AE0	癌眼岩翫	贋雁頑顔	願企伎危	喜器基奇	嬉寄岐希	幾忌揮机	旗既期棋	棄
	8B40	機帰毅気	汽畿祈季	稀紀徽規	記貴起軌	輝飢騎鬼	亀偽儀妓	宜戯技擬	欺犠疑祇
Level 22	8B60	義蟻誼議	掬菊鞠吉	吃喫桔橘	詰砧杵黍	却客脚虐	逆丘久仇	休及吸宮	弓急救
	8B80	朽求汲泣	灸球究窮	笈級糾給	旧牛去居	巨拒拠挙	渠虚許距	鋸漁禦魚	亨享京供
	8BA0	俠僑兇競	共凶協匡	卿叫喬境	峡強彊怯	恐恭挟教	橋況狂狭	矯胸脅興	蕎郷鏡響
Level 23	8BC0	饗驚仰凝	堯暁業局	曲極玉桐	粁僅勤均	巾錦斤欣	欽琴禁禽	筋緊芹菌	衿襟謹近
	8BE0	金吟銀九	倶句区狗	玖矩苦軀	駆駈駒具	愚虞喰空	偶寓遇隅	串櫛釧屑	屈
	8C40	掘窟沓靴	轡窪熊隈	粂栗繰桑	鍬勲君薫	訓群軍郡	卦袈祁係	傾刑兄啓	圭珪型契
Level 24	8C60	形径恵慶	慧憩掲携	敬景桂渓	畦稽系経	継繋罫茎	荊蛍計詣	警軽頚鶏	芸迎鯨
	8C80	劇戟撃激	隙桁傑欠	決潔穴結	血訣月件	倹倦健兼	券剣喧圏	堅嫌建憲	懸拳捲検
	8CA0	権牽犬献	研硯絹県	肩見謙賢	軒遺鍵険	顕験鹸元	原厳幻弦	減源玄現	絃舷言諺
Level 25	8CC0	限乎個古	呼固姑孤	己庫弧戸	故枯湖狐	糊袴股胡	菰虎誇跨	鈷雇顧鼓	五互伍午
	8CE0	呉吾娯後	御悟梧檎	瑚碁語誤	護醐乞鯉	交佼侯候	倖光公功	効勾厚口	向

JIS	SJIS	0123	4567	89AB	CDEF	0123	4567	89AB	CDEF
	8D40	后喉坑垢	好孔孝宏	工巧巷幸	広庚康弘	恒慌抗拘	控攻昂晃	更杭校梗	構江洪浩
Level 26	8D60	港溝甲皇	硬稿糠紅	紘絞綱耕	考肯肱腔	膏航荒行	衡講貢購	郊酵鉱礦	鋼閤降
	8D80	項香高鴻	剛劫号合	壕拷濠豪	轟麹克刻	告国穀酷	鵠黒獄漉	腰甑忽惚	骨狛込此
	8DA0	頃今困坤	墾婚恨懇	昏昆根梱	混痕紺艮	魂些佐叉	唆嵯左差	査沙瑳砂	詐鎖裟坐
Level 27	8DC0	座挫債催	再最哉塞	妻宰彩才	採栽歳済	災采犀砕	砦祭斎細	菜裁載際	剤在材罪
	8DE0	財冴坂阪	堺榊肴咲	崎埼碕鷺	作削咋搾	昨朔栅窄	策索錯桜	鮭笹匙冊	刷
	8E40	察拶撮擦	札殺薩雑	皐鯖捌錆	鮫皿晒三	傘参山惨	撒散桟燦	珊産算纂	蚕讃賛酸
Level 28	8E60	餐斬暫残	仕仔伺使	刺司史嗣	四士始姉	姿子屍市	師志思指	支孜斯施	旨枝止
	8E80	死氏獅祉	私糸紙紫	肢脂至視	詞詩試誌	諮資賜雌	飼歯事似	侍児字寺	慈持時次
	8EA0	滋治爾璽	痔磁示而	耳自蒔辞	汐鹿式識	鴫竺軸宍	雫七叱執	失嫉室悉	湿漆疾質
Level 29	8EC0	実蔀篠偲	柴芝屢蕊	縞舎写射	捨赦斜煮	社紗者謝	車遮蛇邪	借勺尺杓	灼爵酌釈
	8EE0	錫若寂弱	惹主取守	手朱殊狩	珠種腫趣	酒首儒受	呪寿授樹	綬需囚収	周
	8F40	宗就州修	愁拾洲秀	秋終繡習	臭舟蒐衆	襲讐蹴輯	週酋酬集	醜什住充	十従戎柔
Level 30	8F60	汁渋獣縦	重銃叔夙	宿淑祝縮	粛塾熟出	術述俊峻	春瞬竣舜	駿准循旬	楯殉淳
	8F80	準潤盾純	巡遵醇順	処初所署	曙渚庶緒	署書薯藷	諸助叙女	序徐恕鋤	除傷償勝
	8FA0	匠升召哨	商唱嘗奨	妾娼宵将	小少尚庄	床廠彰承	抄招掌捷	昇昌昭晶	松梢樟樵
Level 31	8FC0	沼消渉湘	焼焦照症	省硝礁祥	称章笑粧	紹肖菖蒋	蕉衝裳訟	証詔詳象	賞醬鉦鍾
	8FE0	鐘障鞘上	丈丞乗冗	剰城場壌	嬢常情擾	条杖浄状	畳穣蒸譲	醸錠嘱埴	飾
	9040	拭植殖燭	織職色触	食蝕辱尻	伸信侵唇	娠寝審心	慎振新晋	森榛浸深	申疹真神
Level 32	9060	秦紳臣芯	薪親診身	辛進針震	人仁刃塵	壬尋甚尽	腎訊迅陣	靫笥諏須	酢図厨
	9080	逗吹垂帥	推水炊睡	粋翠衰遂	酔錐錘随	瑞髄崇嵩	数枢趨雛	据杉椙菅	頗雀裾澄
	90A0	摺寸世瀬	畝是凄制	勢姓征性	成政整星	晴棲栖正	清牲生盛	精聖声製	西誠誓請
Level 33	90C0	逝醒青静	斉税脆隻	席惜戚斥	昔析石積	籍績脊責	赤跡蹟碩	切拙接摂	折設窃節
	90E0	説雪絶舌	蟬仙先千	占宣専尖	川戦扇撰	栓栴泉浅	洗染潜煎	煽施穿箭	線
	9140	繊羨腺舛	船薦詮賤	践選遷銭	銑閃鮮前	善漸然全	禅繕膳糎	噌塑岨措	曾曽楚狙
Level 34	9160	疏疎礎祖	租粗素組	蘇訴阻遡	鼠僧創双	叢倉喪壮	奏爽宋層	匝惣想捜	掃挿掻
	9180	操早曹巣	槍槽漕燥	争痩相窓	糟総綜聡	草荘葬蒼	藻装走送	遭鎗霜騒	像増憎臓
	91A0	蔵贈造促	側則即息	捉束測足	速俗属賊	族続卒袖	其揃存孫	尊損村遜	他多太汰
Level 35	91C0	詫唾堕妥	惰打柁舵	楕陀駄騨	体堆対耐	岱帯待怠	態戴替泰	滞胎腿苔	袋貸退逮
	91E0	隊黛鯛代	台大第醍	題鷹滝瀧	卓啄宅托	択拓沢濯	琢託鐸濁	諾茸凧蛸	只
	9240	叩但達辰	奮脱巽竪	辿棚谷狸	鱈樽誰丹	単嘆坦担	探旦歎淡	湛炭短端	簞綻耽胆
Level 36	9260	蛋誕鍛団	壇弾断暖	檀段男談	値知地弛	恥智池痴	稚置致蜘	遅馳築畜	竹筑蓄
	9280	逐秩窒茶	嫡着中仲	宙忠抽昼	柱注虫衷	註酎鋳駐	樗瀦猪苧	著貯丁兆	凋喋寵帖
	92A0	帳庁弔張	彫徴懲挑	暢朝潮牒	町眺聴脹	腸蝶調諜	超跳銚長	頂鳥勅捗	直朕沈珍
Level 37	92C0	賃鎮陳津	墜椎槌追	鎚痛通塚	栂掴槻佃	漬柘辻蔦	綴鍔椿潰	坪壷嬬紬	爪吊釣鶴
	92E0	亭低停偵	剃貞呈堤	定帝底庭	延弟悌抵	挺提梯汀	碇禎程締	艇訂諦蹄	逓

JIS	SJIS	0123	4567	89AB	CDEF	0123	4567	89AB	CDEF
	9340	即鄭釘鼎	泥摘擢敵	滴的笛適	鏑溺哲徹	撤轍迭鉄	典塡天展	店添纏甜	貼転顛点
Level 38	9360	伝殿澱田	電兎吐堵	塗妬屠徒	斗杜渡登	菟賭途都	鍍砥礪努	度土奴怒	倒党冬
	9380	凍刀唐塔	塘套宕島	嶋悼投搭	東桃檮棟	盗淘湯濤	灯燈当痘	禱等答筒	糖統到董
	93A0	蕩藤討謄	豆踏逃透	鐙陶頭騰	闘働動同	堂導憧撞	洞瞳童胴	蔔道銅峠	鴇匿得徳
Level 39	93C0	瀆特督禿	篤毒独読	栃橡凸突	椴届鳶苫	寅酉瀞噸	屯惇敦沌	豚遁頓呑	曇鈍奈那
	93E0	内乍凪薙	謎灘捺鍋	楢馴縄畷	南楠軟難	汝二尼弐	邇匂賑肉	虹廿日乳	入
	9440	如尿韮任	妊忍認濡	禰祢寧葱	猫熱年念	捻撚燃粘	乃廼之埜	嚢悩濃納	能脳膿農
Level 40	9460	覗蚤巴把	播覇杷波	派琶破婆	罵芭馬俳	廃拝排敗	杯盃牌背	肺輩配倍	培媒梅
	9480	楳煤狽買	売賠陪這	蝿秤矧萩	伯剝博拍	柏泊白箔	粕舶薄迫	曝漠爆縛	莫駁麦函
	94A0	箱硲箸肇	筈櫨幡肌	畑畠八鉢	潑発醱髪	伐罰抜筏	閥鳩噺塙	蛤隼伴判	半反叛帆
Level 41	94C0	搬斑板氾	汎版犯班	畔繁般藩	販範釆煩	頒飯挽晩	番盤磐蕃	蛮匪卑否	妃庇彼悲
	94E0	扉批披斐	比泌疲皮	碑秘緋罷	肥被誹費	避非飛樋	簸備尾微	枇毘琵眉	美
	9540	鼻柊稗匹	疋髭彦膝	菱肘弼必	畢筆逼檜	姫媛紐百	謬俵彪標	氷漂瓢票	表評豹廟
Level 42	9560	描病秒苗	錨鋲蒜蛭	鰭品彬斌	浜瀕貧賓	頻敏瓶不	付埠夫婦	富冨布府	怖扶敷
	9580	斧普浮父	符腐膚芙	譜負賦赴	阜附侮撫	武舞葡蕪	部封楓風	葺蕗伏副	復幅服福
	95A0	腹複覆淵	弗払沸仏	物鮒分吻	噴墳憤扮	焚奮粉糞	紛雰文聞	丙併兵塀	幣平弊柄
Level 43	95C0	並蔽閉陛	米頁僻壁	癖碧別瞥	蔑篦偏変	片篇編辺	返遍便勉	娩弁鞭保	舗鋪圃捕
	95E0	歩甫補輔	穂募墓慕	戊暮母簿	菩倣棒包	呆報奉宝	峰峯崩庖	抱捧放方	朋
	9640	法泡烹砲	縫胞芳萌	蓬蜂褒訪	豊邦鋒飽	鳳鵬乏亡	傍剖坊妨	帽忘忙房	暴望某棒
Level 44	9660	冒紡肪膨	謀貌貿鉾	防吠頬北	僕卜墨撲	朴牧睦穆	釦勃没殆	堀幌奔本	翻凡盆
	9680	摩磨魔麻	埋妹味枚	毎哩槙幕	膜枕鮪柾	鱒桝亦俣	又抹末沫	迄儘繭麿	万慢満漫
	96A0	蔓味未魅	巳箕岬密	蜜湊蓑稔	脈妙粍民	眠務夢無	牟矛霧鵡	椋婿娘冥	名命明盟
Level 45	96C0	迷銘鳴姪	牝滅免棉	綿緬面麺	摸模茂妄	孟毛猛盲	網耗蒙儲	木黙目杢	勿餅尤戻
	96E0	籾貰問悶	紋門匁也	冶夜爺耶	野弥矢厄	役約薬訳	躍靖柳藪	鑓愉愈油	癒
	9740	諭輸唯佑	優勇友宥	幽悠憂揖	有柚湧涌	猶猷由祐	裕誘遊邑	郵雄融夕	予余与誉
Level 46	9760	輿預傭幼	妖容庸揚	揺擁曜楊	様洋溶熔	用窯羊耀	葉蓉要謡	踊遙陽養	慾抑欲
	9780	沃浴翌翼	淀羅螺裸	来萊頼雷	洛絡落酪	乱卵嵐欄	濫藍蘭覧	利吏履李	梨理璃痢
	97A0	裏裡里離	陸律率立	葎掠略劉	流溜琉留	硫粒隆竜	龍侶慮旅	虜了亮僚	両凌寮料
Level 47	97C0	梁涼猟療	瞭稜糧良	諒遼量陵	領力緑倫	厘林淋燐	琳臨輪隣	鱗麟瑠塁	涙累類令
	97E0	伶例冷励	嶺怜玲礼	苓鈴隷零	霊麗齢暦	歴列劣烈	裂廉恋憐	漣煉簾練	聯
	9840	蓮連錬呂	魯櫓炉賂	路露労婁	廊弄朗楼	榔浪漏牢	狼籠老聾	蠟郎六麓	禄肋録論
Level 48	9860	倭和話歪	賄脇惑枠	鷲亙亘鰐	詫藁蕨椀	湾碗腕			
	9880								
	98A0								
Level 49	98C0								
	98E0								

Appendix E
ASCII Codes

Rightmost bit		Leftmost bit																
			0	1	2	3	4	5	6	7	8	9	A	B	C	D	E	F
			0000	0001	0010	0011	0100	0101	0110	0111	1000	1001	1010	1011	1100	1101	1110	1111
	0	0000			SP	0	@	P	`	p			SP	—	タ	ミ		
	1	0001			!	1	A	Q	a	q			。	ア	チ	ム		
	2	0010			"	2	B	R	b	r			「	イ	ツ	メ		
	3	0011			#	3	C	S	c	s			」	ウ	テ	モ		
	4	0100			$	4	D	T	d	t			、	エ	ト	ヤ		
	5	0101			%	5	E	U	e	u			・	オ	ナ	ユ		
	6	0110			&	6	F	V	f	v			ヲ	カ	ニ	ヨ		
	7	0111			'	7	G	W	g	w			ァ	キ	ヌ	ラ		
	8	1000			(	8	H	X	h	x			ィ	ク	ネ	リ		
	9	1001			)	9	I	Y	i	y			ゥ	ケ	ノ	ル		
	A	1010	LF		*	:	J	Z	j	z			ェ	コ	ハ	レ		
	B	1011	VT	ESC	+	;	K	[	k	{			ォ	サ	ヒ	ロ		
	C	1100	FF		,	<	L	¥	l	|			ャ	シ	フ	ワ		
	D	1101	CR		-	=	M	]	m	}			ュ	ス	ヘ	ン		
	E	1110			.	>	N	^	n	→			ョ	セ	ホ			
	F	1111			/	?	O	_	o	←			ッ	ソ	マ	°		

- 80 – 9F ——— Using Shift JIS Code
- A0 – DF ——— Used for Japanese character
- E0 – EF ——— Using Special Character Registration
- FE ——— Using Increment Return
- FF ——— Using Page End
- Others ——— Unused (Vacant)

The codes are allocated as illustrated above.

Appendix F
Standard Models

Name	Model	Remarks
Display Terminal Unit	C500-MR341 RAM card is built-in.	C500-DT021
	C500-MR641 ROM Card and ROM-JD-B (27256) are built-in.	C500-DT022
Connector	Connector	DB-25P-N (JAE format)
	Connector cover	DB-C2-J9 (JAE format)
Battery Set	Backup Battery	C500-BAT10

Glossary

Rack-Mounting Host Link Unit — A Host Link Unit that mounts onto a Rack, and not directly to the CPU.

Backplane — A rack of hardware slots sharing a common bus line to which the CPU and all of its I/O Units are connected.

baud rate — The speed at which data is transferred during I/O operations. The standard baud rates are 300, 1200, 2400, 4800, 9600, and 19,200.

binary — The number system that all computers are based on. A binary digit can have only two values, zero and one. The octal and hexadecimal number systems are based on binary digits.

bit — The smallest piece of information that can be represented on a computer. A bit has the value of either zero or one. A bit is one binary digit.

byte — A group of eight bits that is regarded as one unit.

channel — **See word.**

communication mode — The Display Terminal Unit can communicate with peripheral devices in three different communication modes: parallel, serial RS-232, and serial RS-422.

communication port — A connector through which external peripheral devices can communicate with a host computer or microprocessor.

DIP switches — There are two sets of DIP switches on the back panel of the Display Terminal Unit. Each DIP switch has eight pins which can be set to either zero or one. These DIP switches are used for setting the operating and communication modes.

EEPROM — (**E**lectrically **E**rasable **P**rogrammable **R**ead **O**nly **M**emory) A type of ROM in which stored data can be erased and reprogrammed. This is accomplished using a special control lead connected to the EEPROM chip and can be done without having to remove the EEPROM chip from the device in which it is mounted.

EPROM — (**E**rasable **P**rogrammable **R**ead **O**nly **M**emory) A type of ROM in which stored data can be erased, by ultraviolet light or other means, and reprogrammed.

hexadecimal — Hexadecimal or hex is a numerical system based on the number 16. One hex digit can be represented by four binary digits in the range of zero to 15. The numbers 10 through 15 are represented by the letters A through F, respectively.

I/O Device — I/O stands for input/output. Some examples of I/O devices are printers, modems, fax machines, and display terminals.

operating mode — The Display Terminal Unit can operate in five different modes: Page Read, Terminal. Dynamic Scan, Read/Write, and Self-Diagnosis.

Numeric value input strobe — (**N.STB**) This signal functions only during a numeric value display. It tells the DTU when the data on the parallel lines is valid.

page	One complete Display Terminal Unit screen. Two hundred screens can be stored on one RAM card.
page data	Data coming in one the parallel lines that tell the DTU which page to display.
parallel interface	The parallel interface uses the RS-232 connector, but is not serial communication. When parallel mode is selected as the communication mode, up to 16 Display Terminal Units can be connected to a PC in parallel.
polling	A process whereby the microprocessor periodically checks the value of a specified bit or byte, and depending on that value, the microprocessor takes some specified action.
port buffer	Special memory that is used to temporarily store data that has just been received or is about to be sent out through a communication port.
PROM programmer	A PROM programmer is a device used to write data to, PROM, and EPROM storage devices.
RAM	Stands for Random Access Memory. RAM will not retain data when power is disconnected. Therefore data should not be stored in RAM.
RAM/ROM card	Display Terminal Unit removable internal memory used to store registered messages.
register/registered	Storing text and graphics in the RAM/ROM card from a personal computer or the ASCII Unit. Graphics that have been written to the RAM/ROM card are referred to as registered messages.
RS-232C interface	An industry standard interface for serial communications.
RS-422 interface	An industry standard interface for serial communications.
word	In digital circuits, a group of bits. Usually a word consists of four, eight, or sixteen bits. In C-series PCs, a word consists of sixteen bits. Words can be used to store data, or they can be used for I/O.

Index

B

bar graph generation, 46
  BASIC program, 50
  DIP switch settings
    parallel interface, 52
    serial interface, 49

BASIC, 32, 40, 45

battery, 13

C

cables, 8
  24 VDC, 8
  RS-232C, 9
  RS-422, 12

commands, list of..., 65

D

DIP switches, 3
  bar graph settings, 33
  message registration setting, 31
  settings
    dynamic scan mode, 23
    page read and read/write mode, 24
    page read mode, 20
    read/write mode, 23
    self-diagnosis mode, 25
    terminal mode parallel, 20
    terminal mode serial RS-232C, 21
    terminal mode serial RS-422, 22

E

error checking, 73

H

hardware block diagram, 62

I

interfaces, 4
  24 VDC, 4
  RS-232C, 4
  RS-422, 4

M

maintenance, 79

membrane keys, 2

message registration, 30

mode, 15
  dynamic scan, 18
  page read, 16
  page read and read/write, 19
  read/write, 19
  self-diagnosis, 19
  terminal, 18

mounting, 8
  dimensions, 8

N

numeric value display
  DIP switch settings, 41
  PC program, 42

P

PC program, 34, 38

physical dimensions, 61

R

real-time graphics, 45

S

screen map, 28

storage media, 3

system check
  character display, 78
  connector, 76
  display, 75
  general diagnosis, 79
  memory, 73
  message display, 79
  mode switch, 78
  serial, 76

T

troubleshooting, 73

Revision History

A manual revision code appears as a suffix to the catalog number on the front cover of the manual.

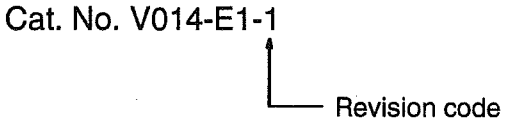

The following table outlines the changes made to the manual during each revision. Page numbers refer to the previous version.

Revision code	Date	Revised content
W171-E1-1	August 1989	Original production
W171-E1-2	February 1992	General cleaning up and editing. **Page 21:** Switch settings changed. **Page 24:** Page Read and Read/Write Mode (RS-232C and Parallel) section added. **Page 49:** Registered pattern changed to #10 at bottom. **Page 62:** Leftmost column of fourth row of table corrected. **Page 63:** Graphic added. **Page 89:** Japanese characters removed from table.
V014-E1-1	December 1996	Catalogue number was changed for this printing.

OMRON Corporation

FA Software Division
Yokohama Business Park 134,
Godo-cho, Hodogaya-ku,
Yokohama-shi, Kanagawa-ken,
240-0005 Japan
Tel:(81)45-336-6212/Fax:(81)45-336-6244

Regional Headquarters

OMRON EUROPE B.V.

Wegalaan 67-69, NL-2132 JD Hoofddorp
The Netherlands
Tel: (31)2356-81-300/Fax: (31)2356-81-388

OMRON ELECTRONICS, INC.

1 East Commerce Drive, Schaumburg, IL 60173
U.S.A.
Tel: (1)847-843-7900/Fax: (1)847-843-8568

OMRON ASIA PACIFIC PTE LTD.

83 Clemenceau Avenue,
#11-01, UE Square,
Singapore 239920
Tel: (65)835-3011/Fax: (65)835-2711

OMRON (CHINA) CO. LTD.

21F,Beijing East Ocean Center
No. 24A Jian Guo Men Wai Da Jie
Chao Yang District, Beijing, 100022
China
Tel:(86)10-6515-5778/Fax:(86)10-6515-5810

OMRON

Authorized Distributor:

Cat. No. V014-E1-1

Note: Specifications subject to change without notice.

Printed in Japan
1199-0.05M SK