Compact Non-Contact Door Switch/Non-Contact Door Switch Controller

D40A/G9SX-NS

Electronic Detection Mechanism for Better Stability in Non-contact Door Switch Operation

For the most recent information on models that have been certified for safety standards, refer to your OMRON website.

⚠ Be sure to read the *"Safety Precautions"* on page 32.

Features

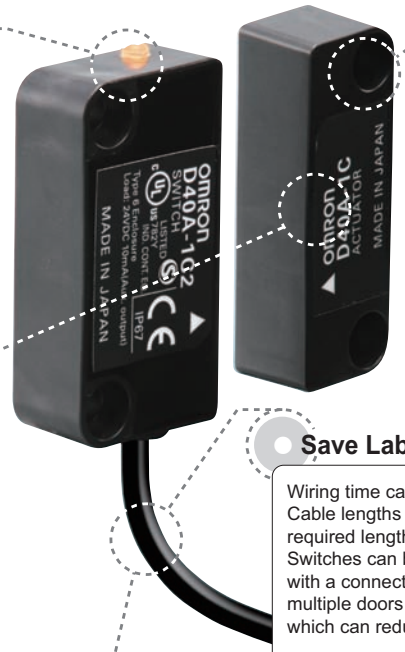

Easy-to-see 2-Color Indicators

Switch status is easy to see at a glance with these red/yellow LED indicators.

Red: Open door detected. | Yellow: Closed door detected. | Not lit: Power OFF or failure

Mount from Either Side

Mount from whichever side provides the easiest wiring path to enable mounting to all types of doors.

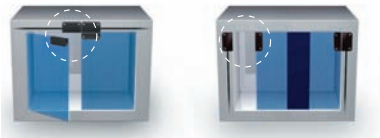

Swinging doors | Sliding doors

Small Actuator

An actuator that is smaller than the switch saves space, even inside the door.
Even when mounted with an L-bracket, the actuator's height will not hinder installation or operation.

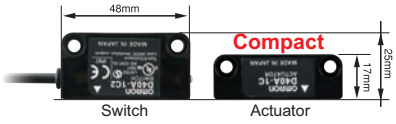

Save Labor with Connector and Reduce Inventory

Wiring time can be reduced with the connector.
Cable lengths can be selected, and only cables of required lengths can be purchased.
Switches can be integrated into a single Switch with a connector when installing in a machine with multiple doors or various types of machines, which can reduce inventory.

Connect Up to 30 Switches to a Single Controller

Reduce costs by connecting up to 30 Switches to a single Controller.

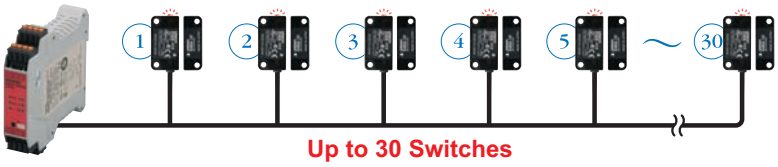

Solves Conventional Switch Issues to Provide Stable Detection

Issue 1 **The Switch does not accurately detect the door when it is closed slowly, resulting in an error.**

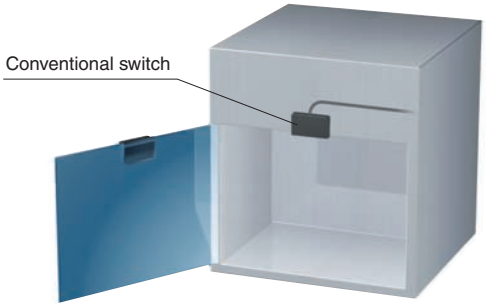

Door closed slowly.

An error can occur if the door is closed slowly with conventional switches.

Solution 1 Conventional Switches

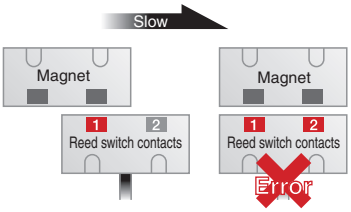

If the switching timing of reed switch contacts 1 and 2 varies too much, the Controller detects an error and turns OFF the output to maintain safety.

Note: The figure is intended only as an illustration.

Stable Detection with the D40A's New System

The D40A does not use reed switches and provides stable detection with electronic switches.

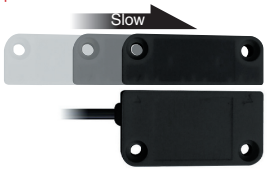

Detects slow lateral operation.

Detects slow rotating operation.

Issue 2 **It is nearly impossible to tell which door is open in a multi-door application.**

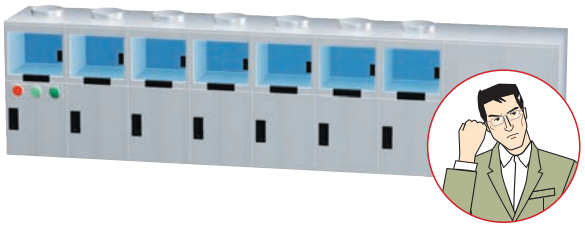

If an error occurs...

The system cannot be started because the Controller has turned OFF the output even though all doors appear to be closed.

It's impossible to tell if there is a door open or if an error has occurred.

All doors must be opened and closed before operation can be started.

Solution 2

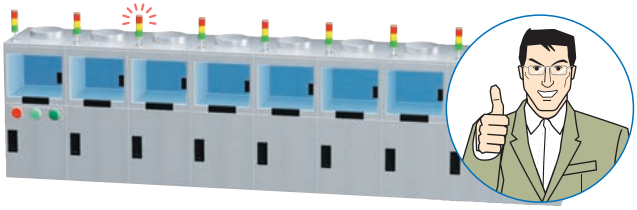

With the D40A...

The auxiliary outputs can be used to easily indicate which door is open.
And with two-color indicators, mounting adjustments are also easy.
The D40A is the first Non-contact Door Switch to combine 2-color indicators, auxiliary outputs, and 30-switch connection capacity, allowing you to create a better safety environment.

Issue 3 **Various cable lengths and complex wiring are required for multiple doors.**

Solution 3

The model with a connector allows you to select the cable lengths that are connected and purchase the cables of required lengths. Switches can be integrated into a single Switch with a connector.
Downtime can be reduced by replacing the cable and switch partially at maintenance time.

Two Types of Controller to Solve Productivity, Expandability, and Maintenance Issues

The G9SX-NS and G9SX-NSA are designed specifically for use with Non-contact door switch, and with the G9SX-NSA you can also connect mechanical safety door switches. Among other features, these Controllers support logical AND connections that enable partial stops. These Controllers make the most of D40A Switches.

Two Different Controllers

G9SX-NS

- ☐Logical AND connection input

- ☐D40A input
- ☐Two instantaneous safety outputs
- ☐Logical AND connection output

G9SX-NSA

- ☐Logical AND connection input

- ☐D40A plus mechanical safety door switch input, channel 1 or 2
- ☐Two instantaneous safety outputs
- ☐Two OFF-delay safety outputs
- ☐Logical AND connection output

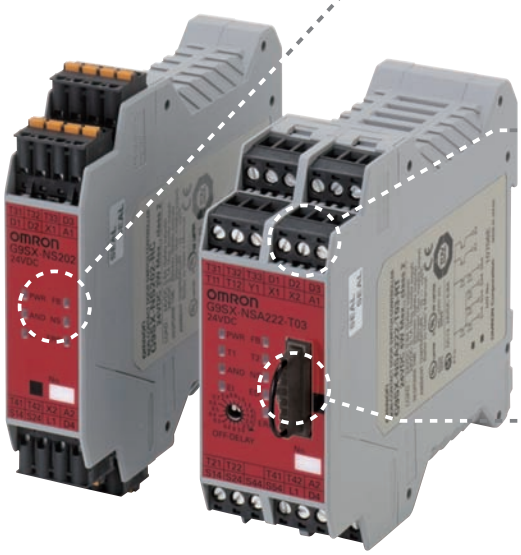

Indicators That Make Maintenance Easier

The indicators show the location and cause of wiring errors and any other errors that are detected. Auxiliary outputs for errors also contribute to reducing down time.

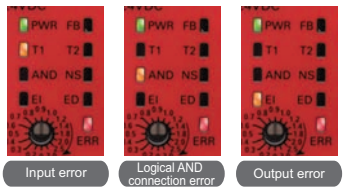

Mechanical Safety Door Switches Can Also Be Connected with the G9SX-NSA

Inputs can be accepted from both D40A Switches and mechanical switches to reduce the number of Controllers and costs.

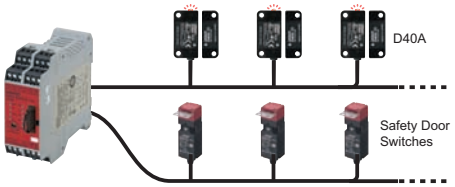

Expansion Units to Easily Increase the Number of Outputs with the G9SX-NSA

The number of outputs can be easily increased using connectors.
Up to 25 outputs can be configured.

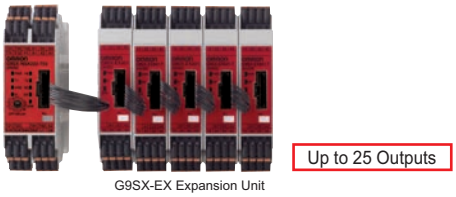

Reduce Costs with these New-Concept Controllers

Issue 1 Two Controllers are required for emergency stop switches and non-contact door switches.

Application

- **One hazard.**
- **The system must be stopped when either a door is opened or an emergency stop switch is pressed.**

The G9SA must be added to connect the emergency stop switch.

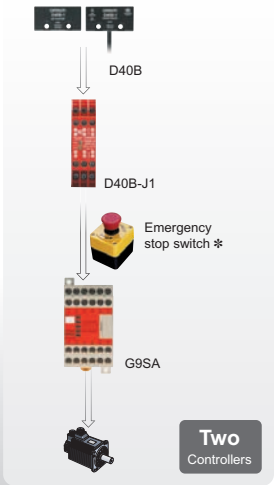

Solution 1

The D40A Simplifies the Configuration

With only one G9SX-NSA222-T03□ Controller, both a Non-contact Door Switch and an emergency stop switch can be connected.

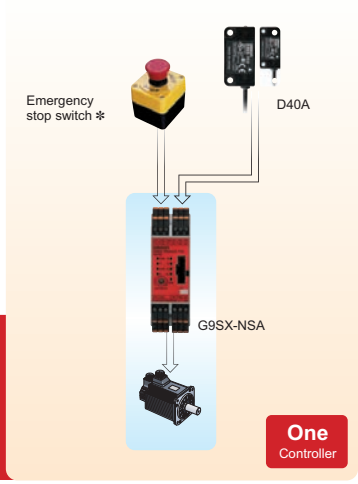

Issue 2 Another Controller has to be added to use an OFF-delay timer.

Application

- **Two hazards.**
- **The power supply must be turned OFF immediately when the emergency stop switch is pressed.**
- **When a door is opened, a stop signal is sent to only servomotor B and then the power supply is turned OFF.**

The G9SA must be added to use an OFF-delay timer.

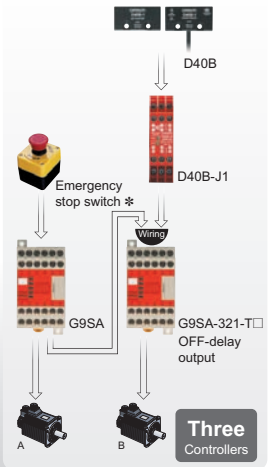

Solution 2

The D40A Simplifies the Configuration

A Controller can be eliminated because the G9SX-NSA222-T03□ provides an OFF-delay output.

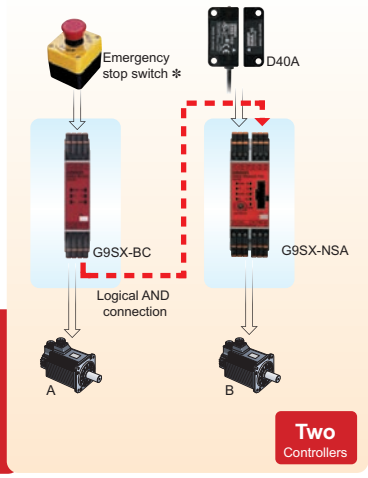

✻ Always use a manual reset when using an emergency stop.

Refer to G9SX for the features of the G9SX Series.

Selection of Safety Controllers for D40A

[Connectable Controllers]
Safety Controller G9SP
Non-contact Door Switch Controller G9SX-NS□

Safety Controller G9SP

- Flexible programming by combining function blocks
- Extensive system configurations
- Decreased work hours by convenient configurator

Function Blocks

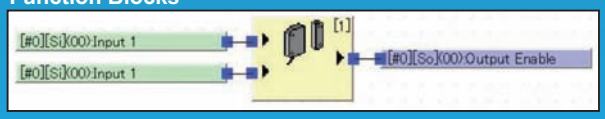

✻ G9SP Series Catalog
Catalog No.: F090

Non-contact Door Switch Controller G9SX-NS□

- Easy expansion of output points by an expansion unit
- Improved maintainability by LED display
- No special programming required

✻ For details on G9SX-NS□, refer to page 12 and the subsequent pages.

Note: For product information, refer to your OMRON website.

Compact Non-Contact Door Switch
D40A

Electronic Detection Mechanism for Better Stability

- Up to 30 units can be connected to a G9SX-NS□ or G9SP. (The G9SP supports 2 channels and up to 15 units per channel.)
- Compact Non-contact Door Switch can be mounted from both sides.
- The cable length can be selected, reducing wiring restrictions, and Switches can be integrated into a single Switch with a connector, reducing inventory.
- Easy maintenance with color LEDs identifying opening/closing of the door and breaking of cable.
- Complies with EN ISO 13849-1 (PLd/Safety Category 3).

For the most recent information on models that have been certified for safety standards, refer to your OMRON website.

⚠ Be sure to read the *"Safety Precautions"* on page 32.

Model Number Structure

Model Number Legend

Non-Contact Door Switch (Switch/Actuator)

D40A - □□□
1 2 3

1. Type
1: Standard model

2. Auxiliary outputs
C: 1NO (PNP transistor output)

3. Cable length
2: 2 m
5: 5 m
015-F: Connector type (Cable length :15cm)

Note: The Switch must be used in combination with a Non-Contact Door Switch Controller (G9SX-NS□) or Safety Controller (G9SP). For details on G9SX-NS□, refer to page 14 or subsequent pages, and for details on G9SP series, refer to "G9SP Series Catalog" (Cat. No. F090).

Ordering Information

List of Models

Non-Contact Door Switches (Switch/Actuator)

Classification	Appearance	Auxiliary outputs	Cable length	Model
Standard models	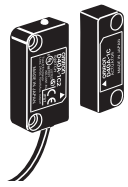	Semiconductor outputs ✻1	2 m	**D40A-1C2**
			5 m	**D40A-1C5**
Connector model			0.15 m	**D40A-1C015-F ✻2**

Note: The Switch must be used in combination with a Non-Contact Door Switch Controller (G9SX-NS□) or Safety Controller (G9SP).
✻1. PNP open-collector semiconductor output.
✻2. The model with a connector is not KOSHA certified.

Cable with connector

Connector Type	Cable Length	Model
Single-end	2 m	**XS2F-D521-DG0-A**
	5 m	**XS2F-D521-GG0-A**
	10 m	**XS2F-D521-JG0-A**
	15 m	**XS2F-D521-KG0-A**
	20 m	**XS2F-D521-LG0-A**

Connector Type	Cable Length	Model
Double-end	2 m	**XS2W-D521-DG1-A**
	5 m	**XS2W-D521-GG1-A**
	10 m	**XS2W-D521-JG1-A**
	15 m	**XS2W-D521-KG1-A**
	20 m	**XS2W-D521-LG1-A**

Note: For details, refer to *XS2 Data Sheet*.

Controllers

Non-Contact Door Switch Controllers G9SX-NS□

Safety outputs ✻1		Auxiliary outputs ✻3	Logical AND connection input	Logical AND connection output	Max. OFF delay time ✻4	Rated voltage	Terminal block type	Model
Instantaneous	OFF-delayed ✻2							
2 (Semi-conductors)	0	2 (Semi-conductors)	1	1	---	24 VDC	Screw terminals	**G9SX-NS202-RT**
							Spring-cage terminals	**G9SX-NS202-RC**
	2 (Semiconductors)				3.0 s		Screw terminals	**G9SX-NSA222-T03-RT**
							Spring-cage terminals	**G9SX-NSA222-T03-RC**

Note: For details, refer to page 12 or subsequent pages.
✻1. P channel MOS FET transistor output
✻2. The OFF-delayed output becomes an instantaneous output by setting the OFF-delay time to 0 s.
✻3. PNP transistor output
✻4. The OFF-delay time can be set in 16 steps as follows:
0/0.2/0.3/0.4/0.5/0.6/0.7/0.8/0.9/1.0/1.2/1.4/1.8/2.0/2.5/3.0 s

Safety Controller G9SP Series

Name	No. of I/O points				Unit version	Model
	Safety inputs	Test outputs	Safety outputs	Standard outputs		
Safety Controller	10	4	Semiconductor outputs: 4	4	Ver.2.0	**G9SP-N10S**
	10	6	Semiconductor outputs: 16	--		**G9SP-N10D**
	20	6	Semiconductor outputs: 8	--		**G9SP-N20S**

Note: For details, refer to the G9SP Series Catalog (Catalog No. F090).

Specifications

Non-contact Door Switches

Ratings and Characteristics

Item		Model	D40A-1C□
Interlock type			Type 4 (EN ISO 14119)
Coding level			Low level coded (EN ISO 14119)
Operating characteristics ✻2	Operating distance OFF→ON		5 mm min. ✻1
	Operating distance ON→OFF		15 mm max. ✻1
	Differential travel		20% or less of operating distance at 23°C (maximum 2.5 mm)
	Influence of temperature (max.)		±20% of operating distance at 23°C, within temperature range of −10 to 55°C
	Repeat accuracy		±10% or less of operating distance at 23°C
Ambient operating temperature			−10 to 55°C (no icing or condensation)
Ambient operating humidity			25% to 85%
Insulation resistance (between charged parts and case)			50 MΩ max. (at 500 VDC)
Dielectric strength (between charged parts and case)			1,000 VAC for 1 min
Pollution degree			3
Electromagnetic compatibility			IEC/EN 60497-5-3 compliant
Vibration resistance			10 to 55 to 10 Hz (single amplitude: 0.75 mm, double amplitude: 1.5 mm)
Shock resistance			300 m/s^2 min.
Degree of protection			IP67
Material			PBT resin
Mounting method			M4 screws
Terminal screw tightening torque			1 N·m
Power supply voltage			24 VDC +10%/−15%
Power consumption			0.6 W max.
Auxiliary outputs ✻3			24 VDC, 10 mA (PNP open-collector outputs)
LED indicators			Actuator not detected (red); actuator detected (yellow)
Connection cables			2 m, 5 m, 0.15m (Connector type)
Number of connectable switches			30 max. (wiring length: 100 m max.) ✻4
Weight			Switch: approx. 145 g, actuator: approx. 20 g (D40A-1C2)

✻1. The condition of this distance are that the switch and actuator target marks are on the same axis and the sensing surfaces are exactly parallel condition. OFF to ON distance shows the switch approaching (Point A in the engineering data graph) and ON to OFF distance shows the switch separating away (Point B in the engineering data graph).
✻2. For details on response time and operating time, refer to the catalog or manual of a safety controller to be connected.
✻3. Turns ON when the actuator is approaching. The G3R series of the SSR can be driven at an auxiliary output of 10 mA. Contact your OMRON representative for details.
✻4. For details, refer to item 5 on page 33.

Engineering Data

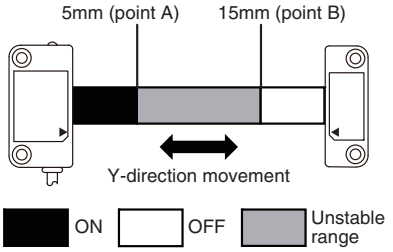

Note: 1. The operating distance is the distance between the switch and actuator sensing surfaces.
2. The graph indicates shifting to X or Z direction from following condition that the switch and actuator target marks are on the same axis and the sensing surfaces are exactly parallel condition.
Dashed lines indate reference value for maximum and minimun oprating distance at abient temperature +23°C. The solid line indicates reference values of the maximum and minimum operating distances.
3. The operating distance may be affected by ambient metal, magnet catches, and temperature.

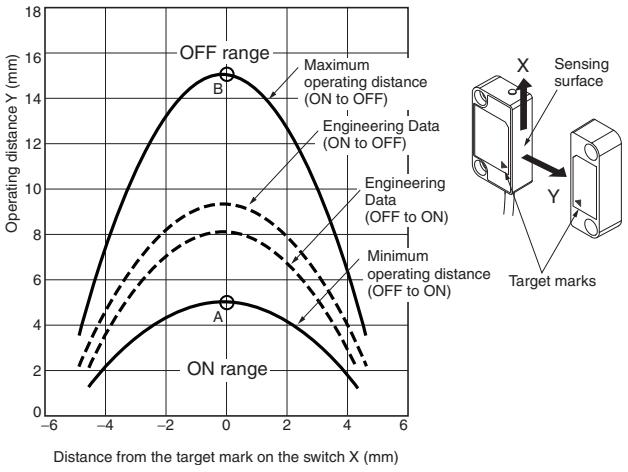

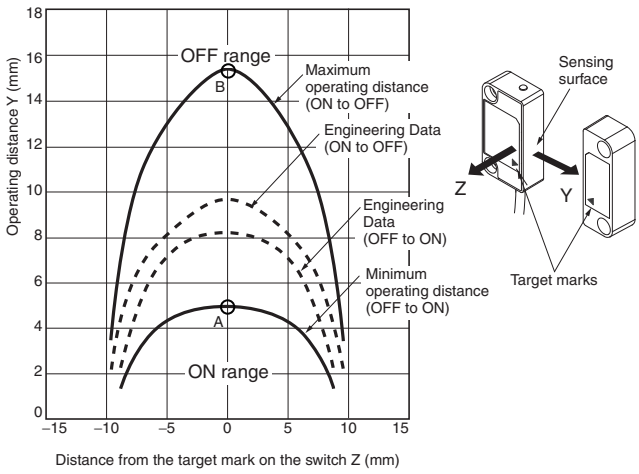

Cable with connector

Ratings and Characteristics

Rated current	4 A
Rated voltage	250 VAC/VDC
Contact resistance (Connector)	40 mΩ max. (20 mV max., 100 mA max.)
Insulation resistance	1,000 MΩ min. (at 500 VDC)
Dielectric strength (Connector)	1,500 VAC for 1 min (leakage current: 1 mA max.).
Degree of protection	IP67 (IEC60529)
Insertion tolerance	200 times min.
Cable holding strength	Cable diameter: 6 mm 98 N/15 s
Ambient operating temperature range	Operating: – 25°C to 70°C
Ambient humidity range	20% to 85%

Materials and Finish

Item		XS2F/H/W
Contacts	**Materials**	Phosphor bronze
	Finish	Nickel base, 0.4-µm gold plating
Thread bracket	**Materials**	Brass
	Finish	Nickel plated
Pin block	**Materials**	PBT resin (UL94V-0)
	Finish	For DC: light gray; for AC: dark gray
O-ring/rubber bushing		Rubber
Cover		PBT resin (UL94V-0)

Connections

Internal Circuit Diagram

D40A-1C□

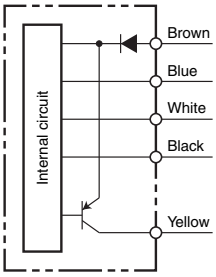

D40A and G9SX-NS□ Wiring

Example: Wiring a Single Switch

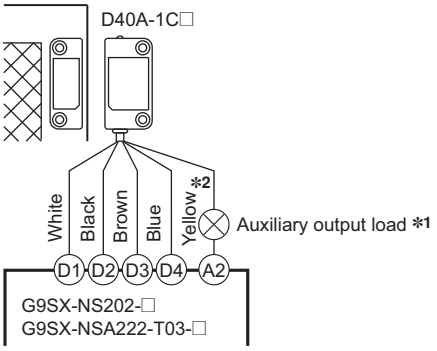

✻1. The auxiliary output load current must be 10 mA max.
✻2. When connecting a XS2F series connector with cable to a connector type, the color of the auxiliary output cable is gray.

Example: Wiring Multiple Switches

Connect Up to 30 Non-contact Door Switches

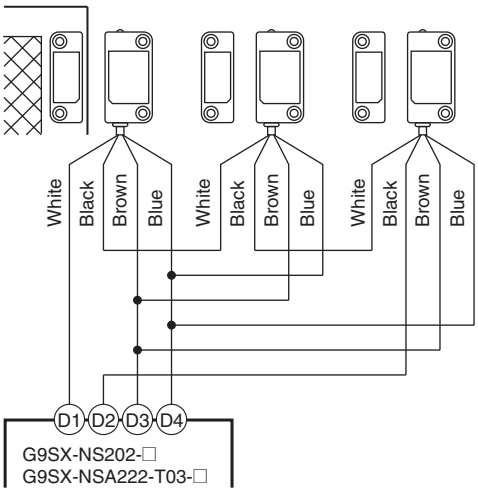

Wiring of Inputs and Outputs

Signal name		Wire color	Pin No. of connector type	Description of operation
Non-contact Door Switch power supply input	+	Brown	1	Supplies power to the D40A. Connect to the D3 and D4 terminal of the G9SX-NS□.
	-	Blue	3	
Non-contact Door Switch input		White	2	Inputs signals from the G9SX-NS□. The Non-contact Door Switch input must be ON as a required condition for the Non-contact Door Switch output to be ON.
Non-contact Door Switch output		Black	4	Turns ON and OFF according to actuator detection and the status of the Non-contact Door Switch input.
Auxiliary output (PNP open-collector output)		Yellow	5	Turns ON when actuator is detected.

Note: When connecting a XS2F series connector with cable to a connector type, the color of the auxiliary output cable is gray.

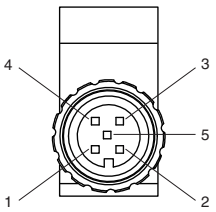

Pin arrangement of connector type

For more information on connection terminal and wiring of G9SP, refer to G9SP Series Safety Controller OPERATION MANUAL (Man. No. Z922).

Dimensions and Terminal Arrangement

(Unit: mm)

Non-contact Door Switch (Switch/Actuator)

D40A-1C2
D40A-1C5
D40A-1C015-F

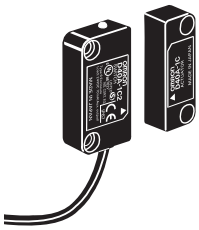

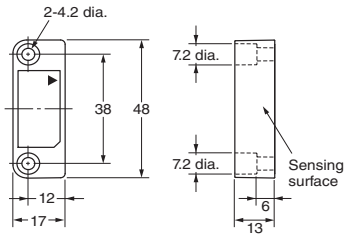

(Actuator)

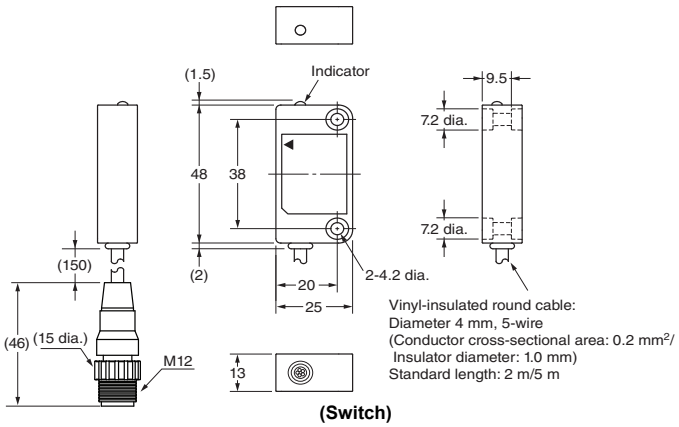

(Switch)

Accessories (Sold separately)

(Unit: mm)

Socket on One Cable End (5-pole Connectors)

XS2F-D521-DG0-A (L=2m)
XS2F-D521-GG0-A (L=5m)
XS2F-D521-JG0-A (L=10m)
XS2F-D521-KG0-A (L=15m)
XS2F-D521-LG0-A (L=20m)

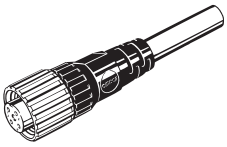

Straight Connectors

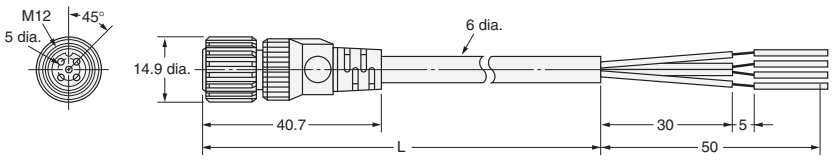

Wiring Diagram

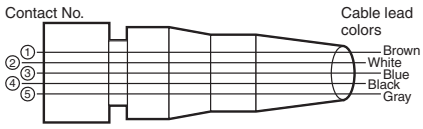

Pin Arrangements (Engagement Side)

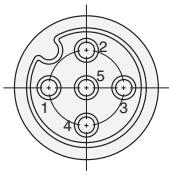

Sockets and Plugs on Cable Ends (5-pole Connectors)

XS2W-D521-DG1-A (L=2m)
XS2W-D521-GG1-A (L=5m)
XS2W-D521-JG1-A (L=10m)
XS2W-D521-KG1-A (L=15m)
XS2W-D521-LG1-A (L=20m)

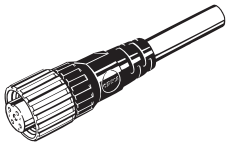

Straight/Straight Connectors

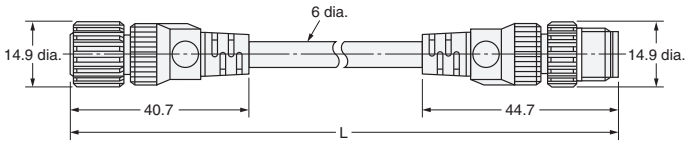

Wiring Diagram for 5 Cores

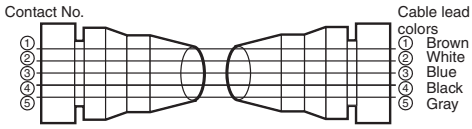

Non-Contact Door Switch Controller
G9SX-NS

Dedicated controller for Non-Contact Door Switch with programless and safety circuit configuration

- Up to 30 units of D40A/D40Z Compact Non-Contact Door Switch can be connected to a single Controller.
- Logical AND connection function provides easy system configuration for partial stop and complete stop.
- Programless.
- G9SX-NSA provides simultaneous inputs of a Non-Contact Door Switch and a conventional key-insertion type Safety Door Switch.

For the most recent information on models that have been certified for safety standards, refer to your OMRON website.

⚠ Be sure to read the *"Safety Precautions"* on page 32.

Model Number Structure

Model Number Legend

Non-Contact Door Switch Controller

G9SX - □□□□□□ - □□□ - □□

1 2 3 4 5 6

1. Functions
NS/NSA: Controller
EX: Expansion Unit

2. Output Configuration (Instantaneous Safety Outputs)
2: 2 outputs
4: 4 outputs

3. Output Configuration (OFF-delayed Safety Outputs)
0: None
2: 2 outputs

4. Output Configuration (Auxiliary Outputs)
1: 1 output
2: 2 outputs

5. Max. OFF-delay Time
Controller
T03: 3 s (Variable)
Expansion Unit
Blank: No OFF delay
T: OFF delay

6. Terminal Block Type
RT: Screw terminals
RC: Spring-cage terminals

Ordering Information

List of Models

Non-Contact Door Switch Controllers

Safety outputs ✻1		Auxiliary outputs ✻3	Logical AND connection input	Logical AND connection output	Max. OFF delay time ✻4	Rated voltage	Terminal block type	Model
Instantaneous	OFF-delayed ✻2							
2 (Semi-conductors)	0	2 (Semi-conductors)	1	1	---	24 VDC	Screw terminals	**G9SX-NS202-RT**
							Spring-cage terminals	**G9SX-NS202-RC**
	2 (Semiconductors)				3.0 s		Screw terminals	**G9SX-NSA222-T03-RT**
							Spring-cage terminals	**G9SX-NSA222-T03-RC**

✻1. P channel MOS FET transistor output
✻2. The OFF-delayed output becomes an instantaneous output by setting the OFF-delay time to 0 s.
✻3. PNP transistor output
✻4. The OFF-delay time can be set in 16 steps as follows:
0/0.2/0.3/0.4/0.5/0.6/0.7/0.8/0.9/1.0/1.2/1.4/1.8/2.0/2.5/3.0 s

Expansion Units

Safety outputs		Auxiliary outputs	OFF-delay time	Rated voltage	Terminal block type	Model
Instantaneous	OFF-delayed					
4PST-NO	---	1 (Semiconductor) ✻1	---	24 VDC	Screw terminals	**G9SX-EX401-RT**
					Spring-cage terminals	**G9SX-EX401-RC**
---	4PST-NO		✻2		Screw terminals	**G9SX-EX041-T-RT**
					Spring-cage terminals	**G9SX-EX041-T-RC**

✻1. PNP transistor output
✻2. The OFF-delay time is synchronized to the OFF-delay time setting in the connected Controller (G9SX-NSA222-T03-□).

Accessories

Terminal Block

Appearance ✻	Specifications	Applicable units	Model	Remarks
	Terminal Block with screw terminals (3-pin)	G9SX-NSA	**Y9S-03T1B-02A**	Two Terminal Blocks (black) with screw terminals, and a set of six code marks to prevent erroneous insertion.
	Terminal Block with screw terminals (4-pin)	G9SX-NS G9SX-EX-□	**Y9S-04T1B-02A**	Two Terminal Blocks (black) with screw terminals, and a set of six code marks to prevent erroneous insertion.
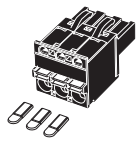	Terminal Block with spring-cage terminals (3-pin)	G9SX-NSA	**Y9S-03C1B-02A**	Two Terminal Blocks (black) with spring-cage terminals, and a set of six code marks to prevent erroneous insertion.
	Terminal Block with spring-cage terminals (4-pin)	G9SX-NS G9SX-EX-□	**Y9S-04C1B-02A**	Two Terminal Blocks (black) with spring-cage terminals, and a set of six code marks to prevent erroneous insertion.

Note: The G9SX main unit comes with a terminal block as standard equipment. The accessories shown here can be ordered as a replacement.
✻ The illustrations show 3-pin types

A datasheet for the Safety Controller G9SX series (Cat. F120) is available.

Specifications

Non-contact Door Switch Controllers

Ratings

Power input

Item / Model	G9SX-NS202-□	G9SX-NSA222-T03-□	G9SX-EX-□
Rated supply voltage	24 V DC		
Operating voltage range	–15% to 10% of rated supply voltage		
Rated power consumption ✻	3 W max.	4 W max.	2 W max.

✻ Power consumption of loads not included.

Inputs

Item / Model	G9SX-NS202-□/G9SX-NSA222-T03-□
Safety input ✻1	Operating voltage: 20.4 VDC to 26.4 VDC, internal impedance: approx. 2.8 kΩ ✻2
Feedback/reset input	

✻1. Only applies to the G9SX-NSA222-T03-□. Refers to input other than that from the Non-contact Door Switch.
✻2. Provide a current equal to or higher than that of the minimum applicable load of the connected input control device.

Outputs

Item / Model	G9SX-NS202-□/G9SX-NSA222-T03-□
Instantaneous safety output ✻1 **OFF-delayed safety output ✻1**	P channel MOS FET transistor output Load current: 0.8 A DC max. ✻2
Auxiliary output	PNP transistor output Load current: 100 mA max.

✻1. While safety outputs are in the ON state, the following signal sequence is output continuously for diagnosis.
When using the safety outputs as input signals to control devices (i.e. Programmable Controllers), consider the OFF pulse shown below.

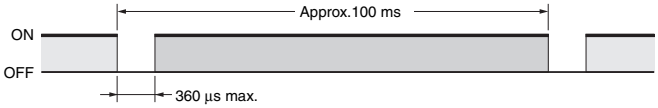

✻2. The following derating is required when Units are mounted side-by-side.
G9SX-NS202-□/G9SX-NSA222-T03-□: 0.4 A max. load current

Expansion Unit

Item / Model	G9SX-EX-□
Rated load	250 VAC, 3 A/30 VDC, 3 A (resistive load)
Rated carry current	3 A
Maximum switching voltage	250 VAC, 125 VDC

Characteristics

Item		Model	G9SX-NS202-□	G9SX-NSA222-T03-□	G9SX-EX-□
Over-voltage category (IEC/EN 60664-1)			II		II (Relay outputs 13 to 43 and 14 to 44: III)
Operating time (OFF to ON state) ✻1			Logical AND connection input: 100 ms max. D40A connected: 100 ms max. D40Z connected: 200 ms max.	Safety input: 50 ms max. ✻2 Logical AND connection input: 100 ms max. ✻3 D40A connected: 100 ms max. ✻3 D40Z connected: 200 ms max. ✻3	30 ms max. ✻4
Response time (ON to OFF state) ✻1			15 ms max. (Logical AND connection input: OFF) Logical AND connection input: 15 ms max. D40A connected: 20 ms max. ✻6 D40Z connected: 45 ms max.	15 ms max. (Logical AND connection input: OFF) Safety input: 15 ms max. Logical AND connection input: 15 ms max. D40A connected: 20 ms max. ✻6 D40Z connected: 45 ms max.	10 ms max. ✻4
ON-state residual voltage			3.0 V max. (safety output, auxiliary output)		
OFF-state leakage current			0.1 mA max. (safety output, auxiliary output)		
Maximum wiring length of safety input, logical AND connection input, and Non-contact Door Switch input			100 m max. (External connection impedance: 100 Ω max. and 10 nF max.)		
Reset input time (Reset button pressing time)			100 ms min.		
Accuracy of OFF-delay time ✻5			---	Within ±5% of the set value	Within ±5% of the set value
Insulation resistance	Between logical AND connection terminals, and power supply input terminals and other input and output terminals connected together		20 MΩ min. (at 100 VDC)		---
	Between all terminals connected together and DIN rail				100 MΩ min. (at 500 VDC)
Dielectric strength	Between logical AND connection terminals, and power supply input terminals and other input and output terminals connected together		500 VAC for 1 min.		---
	Between all terminals connected together and DIN rail				1,200 VAC for 1 min
	Between different poles of outputs		---		
	Between relay outputs connected together and other terminals connected together				2,200 VAC for 1 min
Vibration resistance			10 to 55 to 10 Hz, 0.375 mm single amplitude (0.75 mm double amplitude)		
Shock resistance	Destruction		300 m/s²		
	Malfunction		100 m/s²		
Durability	Electrical		---		100,000 cycles min. rated load, switching frequency: 1,800 cycles/hour)
	Mechanical		---		5,000,000 cycles min. (switching frequency: 7,200 cycles/hour)
Ambient operating temperature			–10 to 55°C (no icing or condensation)		
Ambient operating humidity			25% to 85%		
Terminal tightening torque			0.5 N·m (For the G9SX-NS□-RT (with screw terminals) only)		
Weight			Approx. 125 g	Approx. 200 g	Approx. 165 g

✻1. When two or more Units are connected by logical AND, the operating time and response time are the sum total of the operating times and response times, respectively, of all the Units connected by logical AND.
The operating time/response time of the Non-contact Door Switch are included of the time with the D40A/D40Z.
✻2. Represents the operating time when the safety input turns ON with all other conditions set.
✻3. Represents the operating time when the logical AND input and the Non-contact Door Switch input turn ON with all other conditions set.
✻4. This does not include the operating time or response time of G9SX-NS□ that are connected.
✻5. This does not include the operating time or response time of internal relays in the G9SX-EX-□.
✻6. The failure detection time for 24 V short-circuit failure on the input to Non-contact Door Switches is 35 ms max.
If using the Switch for an application other than as a Door Switch, calculate the safe distance using a failure detection time of 35 ms.

Logical AND Connection

Item / Model	G9SX-NS202-□	G9SX-NSA222-T03-□	G9SX-EX-□
Number of Units connected per logical AND output	4 Units max.		---
Total number of Units connected by logical AND ✻1	20 Units max.		---
Number of Units connected in series by logical AND	5 Units max.		---
Max. number of Expansion Units connected ✻2	---		5 Units max.
Maximum cable length for logical AND input	100 m max.		---

Note: See Logical AND Connection Combinations below for details.
✻1. The number of G9SX-EX401-□ Expansion Units or G9SX-EX041-T-□ Expansion Units (OFF-delayed Model) not included.
✻2. G9SX-EX401-□ Expansion Units and G9SX-EX041-T-□ Expansion Units (OFF-delayed Model) can be mixed.

Logical AND Connection Combinations

1. One logical AND connection output from a G9SX-NS□ Controller can be logical AND connected to up to four Controllers.

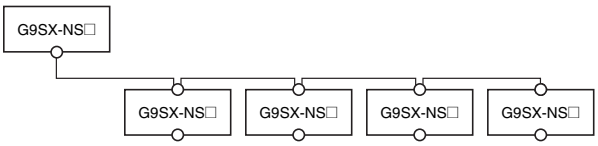

2. Any G9SX-NS□ Controller that receives a logical AND connection input can be logically connected to other Controllers on up to five layers.

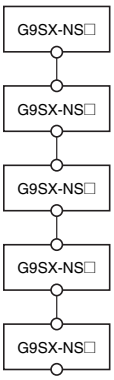

Note: The G9SX-NS□ in the above diagram can be replaced by the G9SX-AD□ Advanced Unit.
For details on G9SX-AD□ advanced unit, refer to G9SX Flexible Safety Unit on your OMRON website.

3. The largest possible system configuration contains a total of 20 G9SX-NS□ Controllers, G9SX-AD□ Advanced Units, and G9SX-BC Basic Units. In this configuration, each Controller or Advanced Unit can have up to five Expansion Units.

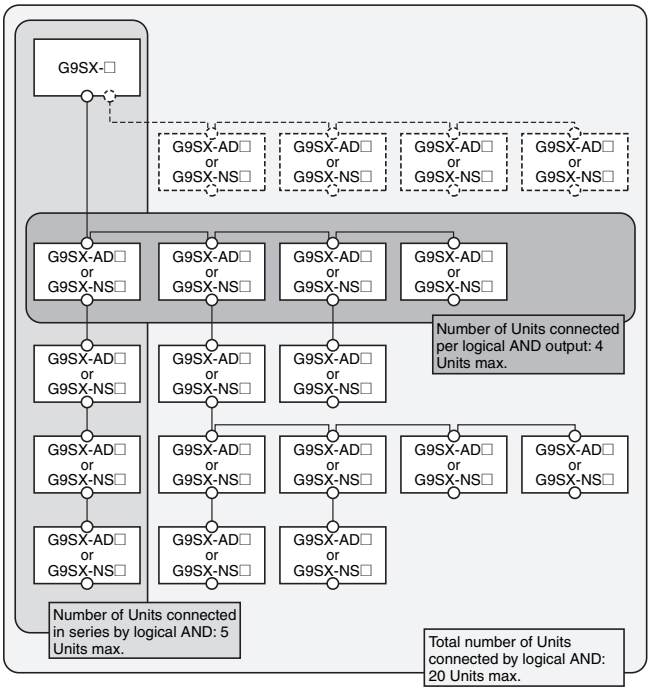

Response Time and Operating Time

1. G9SX-NS□

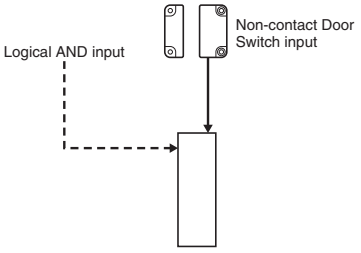

	Max. response time (excluding Expansion Units) ✻1	Max. operating time (excluding Expansion Units) ✻2
Non-contact Door Switch input	D40A connected: 20 ms max. ✻3 D40Z connected: 45 ms max. ✻3	D40A connected: 100 ms max. ✻4 D40Z connected: 200 ms max. ✻4
Logical AND input	15 ms	100 ms

✻1. The maximum response time is the time it takes the output to switch from ON to OFF after the input switches from ON to OFF.
✻2. The maximum operating time is the time it takes the output to switch from OFF to ON after the input switches from OFF to ON.
✻3. Represents the response time of Non-contact Door Switch (1 to 30 units connected) and the response time of G9SX-NS added.
✻4. Represents the operating time of Non-contact Door Switch (1 to 30 units connected) and the operating time of G9SX-NS added.

2. G9SX-NSA□

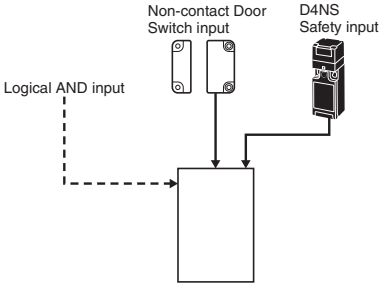

	Max. response time (excluding Expansion Units) ✻1	Max. operating time (excluding Expansion Units) ✻2
Non-contact Door Switch input	D40A connected: 20 ms max. ✻3 D40Z connected: 45 ms max. ✻3	D40A connected: 100 ms max. ✻4 D40Z connected: 200 ms max. ✻4
Safety input	15 ms	50 ms
Logical AND input	15 ms	100 ms

✻1. The maximum response time is the time it takes the output to switch from ON to OFF after the input switches from ON to OFF.
✻2. The maximum operating time is the time it takes the output to switch from OFF to ON after the input switches from OFF to ON.
✻3. Represents the response time of Non-contact Door Switch (1 to 30 units connected) and the response time of G9SX-NS added.
✻4. Represents the operating time of Non-contact Door Switch (1 to 30 units connected) and the operating time of G9SX-NS added.

3. Multiple G9SX-NS□/NSA□ Non-contact Door Switch Controllers

When multiple Controllers are logically connected with AND connections, the response time is the sum of the response times given in 1 and 2 above. (It is the same for the operating time.)

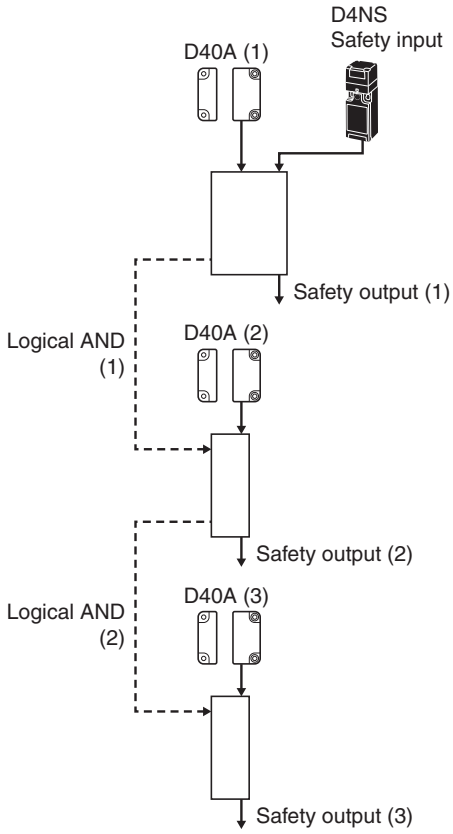

Case (a)
Response Time from When D40A (1) Turns from ON to OFF until Safety Output (2) Turns from ON to OFF

20 ms (D40A (1))	+	15 ms (Logical AND connection (1))	=	35 ms

Note: 45 ms + 15 ms = 60 ms when D40Z is connected.

Case (b)
Response Time from When D4NS Turns from ON to OFF until Safety Output (3) Turns from ON to OFF

15 ms (D4NS)	+	15 ms (Logical AND connection (1))	+	15 ms (Logical AND connection (2))	=	45 ms

Connections

Internal Connection

G9SX-NS202-□ (Non-contact Door Switch Controller)

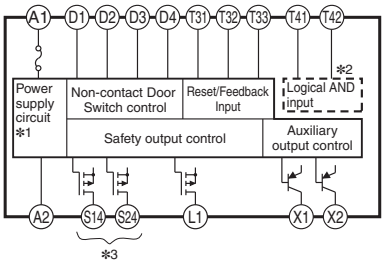

✻1. Internal power supply circuit is not isolated.
✻2. Logical AND input is isolated.
✻3. Outputs S14 to S24 are internally redundant.

G9SX-EX401-□/G9SX-EX041-T-□ (Expansion Unit/Expansion Unit OFF-delayed Model)

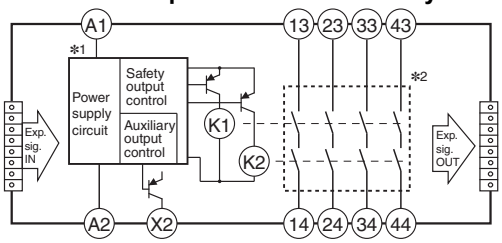

✻1. Internal power supply circuit is not isolated.
✻2. Relay outputs are isolated.

G9SX-NSA222-T03-□ (Non-contact Door Switch Controller)

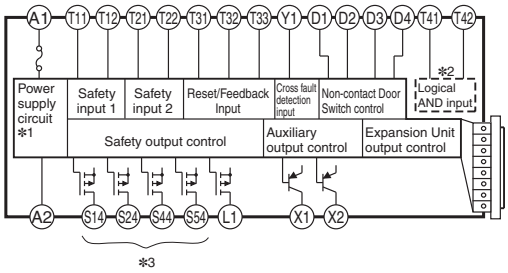

✻1. Internal power supply circuit is not isolated.
✻2. Logical AND input is isolated.
✻3. Outputs S14 to S54 are internally redundant.

D40A, D40Z and G9SX-NS□ Wiring

Example: Wiring a Single Switch

D40A

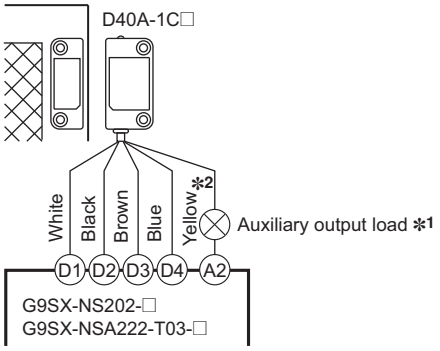

D40Z

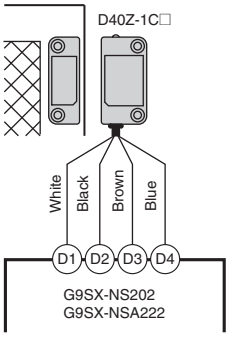

✻1. The auxiliary output load current must be 10 mA max.
✻2. When connecting a XS2F series connector with cable to a connector type, the color of the auxiliary output cable is gray.

Example: Wiring Multiple Switches

Connect Up to 30 Non-contact Door Switches

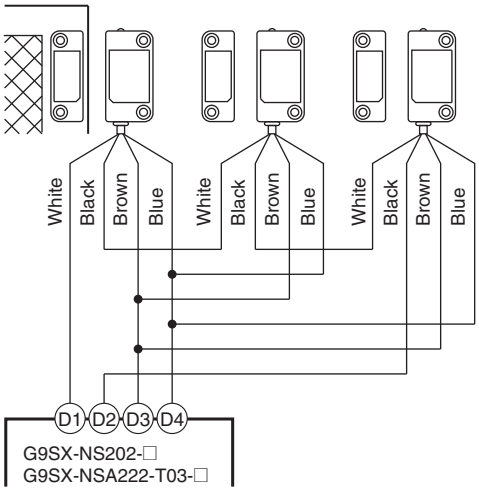

Example of auxiliary outputs of the D40Z

The auxiliary output of the D40Z supports the input polarities of both PNP and NPN.

PNP

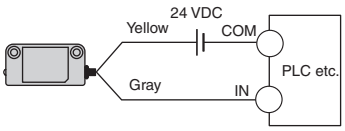

NPN

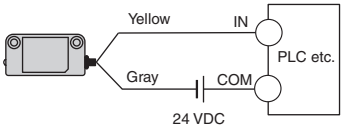

Note: The auxiliary output load current must be 10 mA max. Wrong connection may lead to a failure of the auxiliary output circuit.

Wiring of Inputs and Outputs

Signal name		Cable color of D40A/D40Z	Pin No. of D40A connector type	Description of operation
Non-contact Door Switch power supply input	+	Brown	1	Supplies power to the D40A or D40Z. Connect to the D3 and D4 terminal of the G9SX-NS□.
	-	Blue	3	
Non-contact Door Switch input		White	2	Inputs signals from the G9SX-NS□. The Non-contact Door Switch input must be ON as a required condition for the Non-contact Door Switch output to be ON.
Non-contact Door Switch output		Black	4	Turns ON and OFF according to actuator detection and the status of the Non-contact Door Switch input.
Auxiliary output		Yellow	---	Turns ON when actuator is detected. When a fault is detected, turns into OFF state regardless of actuator status. ✻3
		Gray	5	

Note: 1. When connecting a XS2F series connector with cable to a D40A connector type, the cable color of the auxiliary output is gray.
2. For details, refer to the data sheet of each Non-contact Door Switch.
✻3. Only D40Z turns into OFF state when a fault is detected by the actuator.

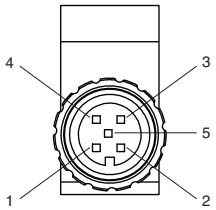

Pin arrangement of D40A connector type

Wiring of Inputs and Outputs

G9SX-NS202-□

Signal name	Terminal name	Description of operation	Wiring	
Power supply input	A1, A2	Connect the power source to the A1 and A2 terminals.	Connect the power supply plus (24 VDC) to the A1 terminal. Connect the power supply minus (GND) to the A2 terminal.	
Non-contact Door Switch input	D1, D2, D3, D4	All Non-contact Door Switch inputs connected to the G9SX-NS□ must be ON as a required condition for the safety outputs to be ON. Otherwise the safety outputs cannot be in the ON state.	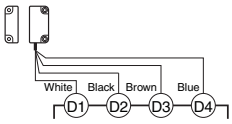	
Feedback/reset input	T31, T32, T33	To set the safety outputs in the ON state, the ON state signal must be input to T33. Otherwise the safety outputs cannot be in the ON state.	Auto reset	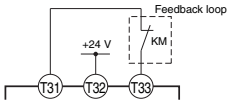
		To set the safety outputs in the ON state, the signal input to T32 must change from the OFF state to the ON state, and then to the OFF state. Otherwise the safety outputs cannot be in the ON state.	Manual reset	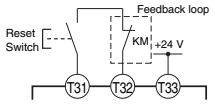
Logical AND connection input	T41, T42	A logical AND connection means that one unit (Unit A) outputs a safety signal “a” to a subsequent unit (Unit B) and Unit B calculates the logical AND (i.e., outputs the AND) of the signal “a” and safety signal “b”, which is input to Unit B. Thereby the logic of the safety output of Unit B is (AND). (An AND of inputs “a” and “b” is output.) To set the safety outputs of the subsequent Unit in the ON state, its logical AND connection preset switch must be set to AND (enable) and the high signal must be input to T41 of the subsequent unit.	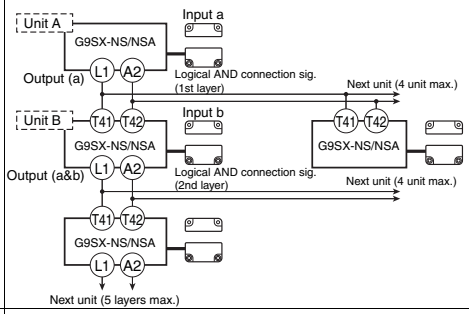	
Instantaneous safety output	S14, S24	Turns ON/OFF according to the state of the safety inputs, Non-contact Door Switch inputs, feedback/reset inputs, and logical AND connection inputs.	Keep these outputs open when not used.	
Logical AND connection output	L1	Outputs a signal of the same logic and at the same time as the instantaneous safety outputs.	Keep these outputs open when not used.	
Auxiliary monitor output	X1	Outputs a signal of the same logic and at the same time as the instantaneous safety outputs.	Keep these outputs open when not used.	
Auxiliary error output	X2	Outputs when the error indicator is lit or flashing.	Keep these outputs open when not used.	

G9SX-NSA222-T03-□

Signal name	Terminal name	Description of operation	Wiring	
Power supply input	A1, A2	Connect the power source to the A1 and A2 terminals.	Connect the power supply plus (24 VDC) to the A1 terminal. Connect the power supply minus (GND) to the A2 terminal.	
Safety input 1	T11, T12	To set the safety outputs in the ON state, the high state signals must be input to both safety input 1 and safety input 2. Otherwise the safety outputs cannot be in the ON state.	Using safety input 1 system	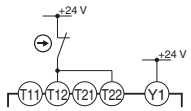
			Using safety input 2 system (without short-circuit monitoring between systems)	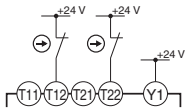
Safety input 2	T21, T22		Using safety input 2 system (with short-circuit monitoring between systems)	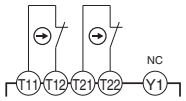
Non-contact Door Switch input	D1, D2, D3, D4	All Non-contact Door Switch inputs connected to the G9SX-NS must be ON as a required condition for the safety outputs to be ON. Otherwise the safety outputs cannot be in the ON state.	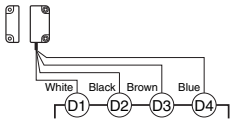	
Feedback/reset input	T31, T32, T33	To set the safety outputs in the ON state, the ON state signal must be input to T33. Otherwise the safety outputs cannot be in the ON state.	Auto reset	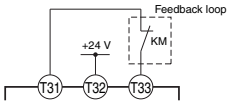
		To set the safety outputs in the ON state, the signal input to T32 must change from the OFF state to the ON state, and then to the OFF state. Otherwise the safety outputs cannot be in the ON state.	Manual reset	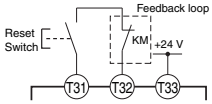
Logical AND connection input	T41, T42	A logical AND connection means that one unit (Unit A) outputs a safety signal “a” to a subsequent unit (Unit B) and Unit B calculates the logical AND (i.e., outputs the AND) of the signal “a” and safety signal “b”, which is input to Unit B. Thereby the logic of the safety output “b” is output.) To set the safety outputs of the subsequent Unit in the ON state, its logical AND connection preset switch must be set to AND (enable) and the high signal must be input to T41 of the subsequent unit.	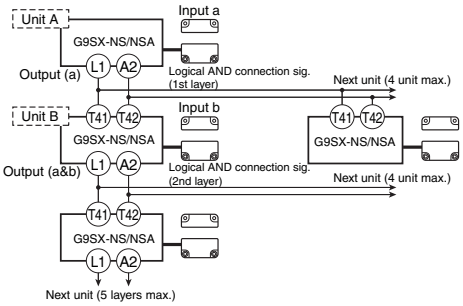	
Cross fault detection input	Y1	Selects the mode for the failure detecting (cross fault detecting) function for the safety inputs of G9SX corresponding to the connection of the cross fault detection input.	Whether Y1 is connected depends on whether the T11 and T21 terminals are used. Refer to wiring information for safety inputs 1 and 2.	
Instantaneous safety output	S14, S24	Turns ON/OFF according to the state of the safety inputs, feedback/reset inputs, and logical AND connection inputs. During OFF-delay state, the Instantaneous safety outputs are not able to turn ON.	Keep these outputs open when not used.	
OFF-delayed safety output	S44, S54	OFF-delayed safety outputs. The OFF-delay time is set by the OFF-delay preset switch. When the delay time is set to zero, these outputs can be used as non-delay outputs.	Keep these outputs open when not used.	
Logical AND connection output	L1	Outputs a signal of the same logic and at the same time as the instantaneous safety outputs.	Keep these outputs open when not used.	
Auxiliary monitor output	X1	Outputs a signal of the same logic and at the same time as the instantaneous safety outputs.	Keep these outputs open when not used.	
Auxiliary error output	X2	Outputs when the error indicator is lit or flashing.	Keep these outputs open when not used.	

Dimensions and Terminal Arrangement

(Unit: mm)

Non-contact Door Switch Controller

G9SX-NS202-□

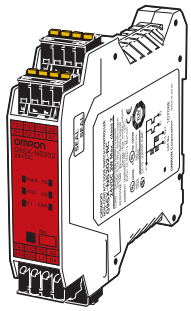

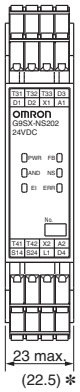

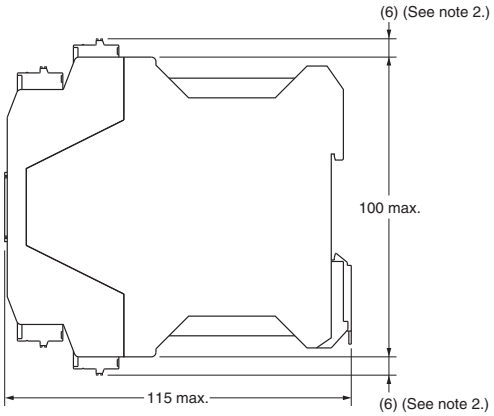

Terminal arrangement

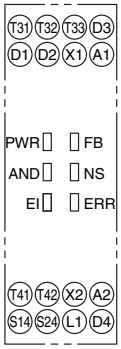

Note: 1. Above outline drawing is for models with spring-cage terminals (-RC).
2. For models with spring-cage terminals (-RC) only.
✻ Typical dimension

Non-contact Door Switch Controller

G9SX-NSA222-T03-□

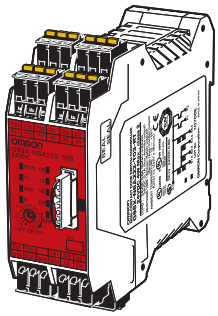

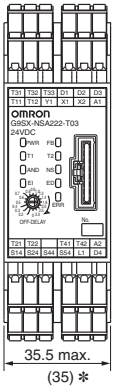

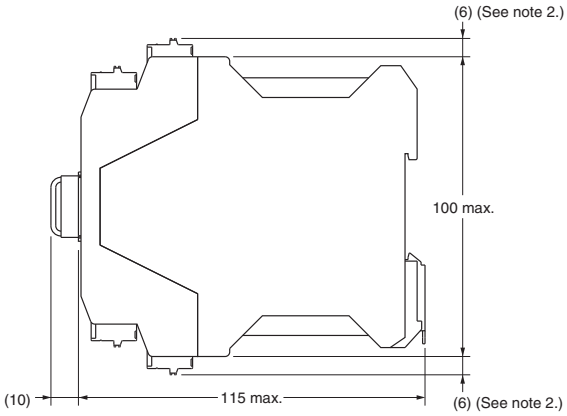

Terminal arrangement

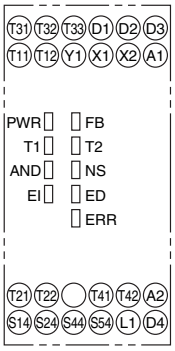

Note: 1. Above outline drawing is for models with spring-cage terminals (-RC).
2. For models with spring-cage terminals (-RC) only.
✻ Typical dimension

Expansion Unit

G9SX-EX401-□

Expansion Unit (OFF-delayed Model)

G9SX-EX041-T-□

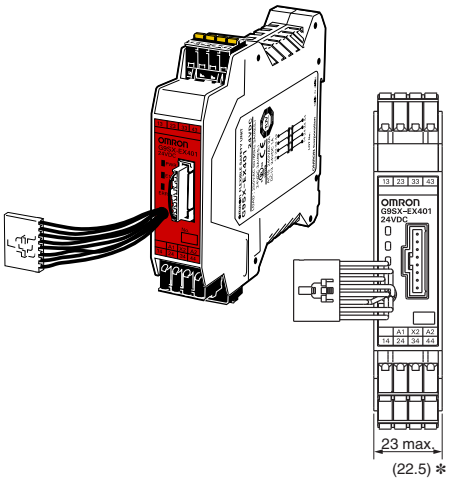

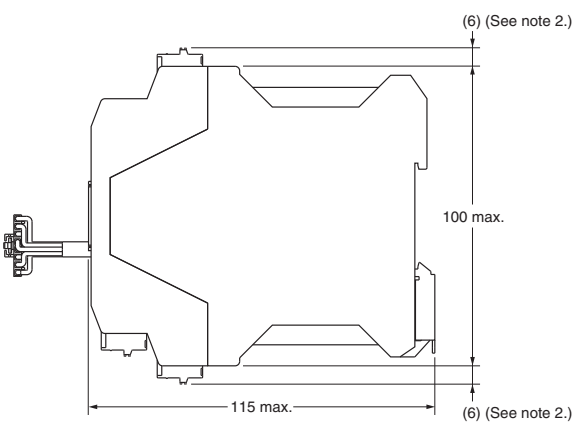

Terminal arrangement

G9SX-EX401-□ (Expansion Unit)

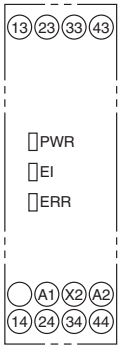

G9SX-EX041-T-□ (Expansion Unit with OFF Delay)

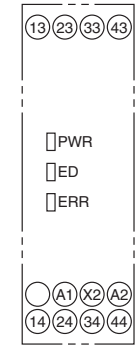

Note: 1. Above outline drawing is for models with spring-cage terminals (-RC).
2. For models with spring-cage terminals (-RC) only.
✻ Typical dimension

Operation

Functions

Logical AND Connection

A logical AND connection means that the G9SX outputs a safety signal “a” to another G9SX, and that G9SX creates the logical AND of safety signal “a” and safety signal “b.” The safety output of the G9SX-NSA222-T03-□ with the logical AND connection shown in the following diagram is “a” AND “b.”

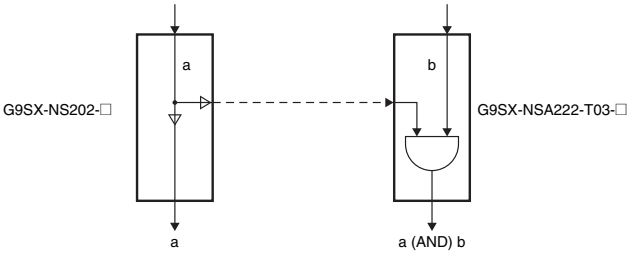

This is illustrated using the application in the following diagram as an example. The equipment here has two hazards identified as Robot 1 and Robot 2, and it is equipped with Non-contact Door Switches and an emergency stop button as safety measures. If the door to Robot 2 is opened, only Robot 2 is stopped (i.e., a partial stop). If the door to Robot 1 is opened or the emergency stop button is pressed, both Robot 1 and Robot 2 stop (i.e., a complete stop).

The actual situation using a G9SX for this application is shown in this example.

Note: The logical AND setting on the G9SX-NS202-□ must be set to AND (enabled).

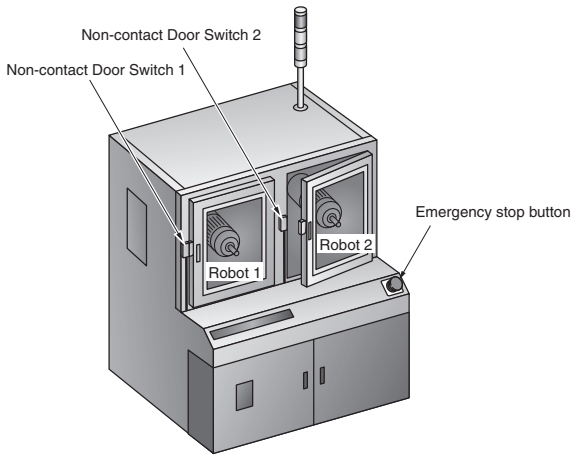

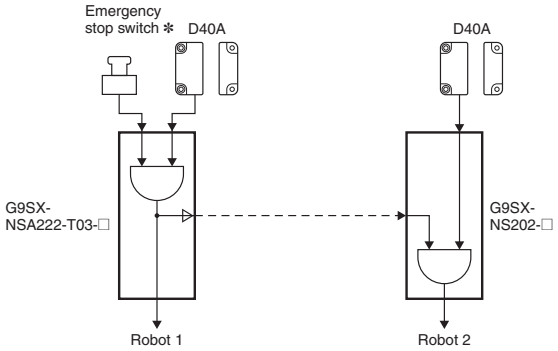

✻ A manual reset is required when an emergency stop is used.

Connecting Expansion Units

- The G9SX-EX and G9SX-EX-T Expansion Units can be connected to a G9SX-NSA222-T3-□ Non-contact Door Switch Controller to increase the number of safety outputs. (They cannot be connected to a G9SX-NS202-□.)
- A maximum of five Expansion Units can be connected to one G9SX-NSA222-T03-□. This may be a combination of G9SX-EX instantaneous models and G9SX-EX-T OFF-delayed models.
- Remove the terminating connector from the receptacle on G9SX-NSA222-T03-□ and insert the Expansion Unit cable connector into the receptacle. Insert the terminating connector into the receptacle on the Expansion Unit at the very end (rightmost).
- When Expansion Units are connected to a Controller, make sure that power is supplied to every Expansion Unit. (Refer to the following diagram for actual Expansion Unit connection.)

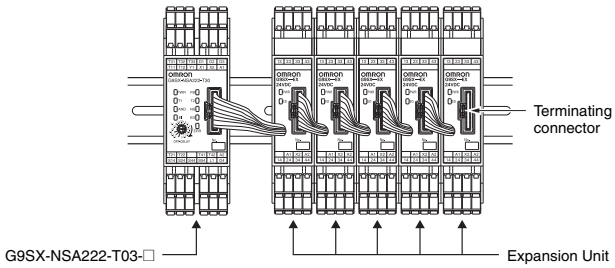

Setting Procedure

1. Cross Fault Detection (G9SX-NSA222-T03-□)

Set the cross fault detection mode for safety inputs by shorting Y1 to 24 V or leaving it open.
When cross fault detection is set to ON, short-circuit failures are detected between safety inputs T11-T12 and T21-22. When a cross fault is detected, the following will occur.
(1) The safety outputs and logical AND outputs lock out.
(2) The LED error indicator is lit.
(3) The error output (auxiliary output) turns ON.

Cross fault detection	Wiring	
OFF	Using safety input 1 system	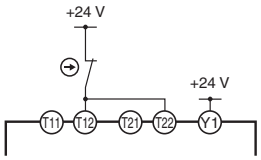
OFF	Using safety input 2 system	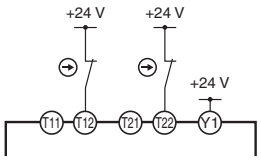
ON		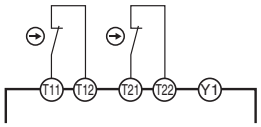

2. Reset Mode (G9SX-NS202-□/NSA222-T03-□)

Set the reset mode using feedback/reset input terminals T31, T32, and T33.
Auto reset mode is selected when terminal T32 is shorted to 24 V and manual reset mode is selected when terminal T33 is shorted to 24 V.

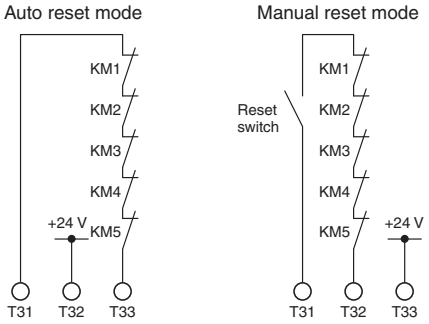

3. Setting Logical AND Connection (G9SX-NS202-□/NSA222-T03-□)

When connecting two or more Non-contact Door Switch Controllers by logical AND connection, set the logical AND connection preset switch on the Controller that is on the input side (Unit B in the following diagram) to AND. The default setting of the logical AND connection preset switch is set to OFF.

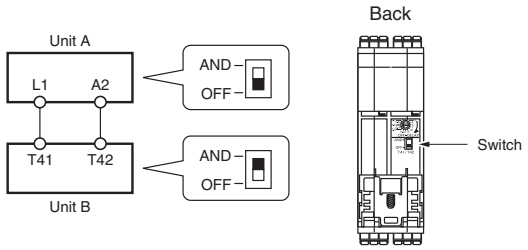

Note: A setting error will occur and Unit B will lock out if the logical AND setting switch on the Unit B is set to OFF.

4. Setting the OFF-delay Time (G9SX-NSA222-T03-□)

The OFF-delay preset time on G9SX-NSA222-T03-□ is set from the OFF-delay time preset switch (1 each on the front and back of the Unit).
Normal operation will only occur if both switches are identically set. An error will occur if the switches are not identically set. The default setting of the OFF-delay time preset switch is set to 0 s.

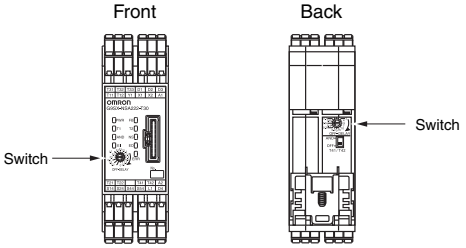

Refer to the following illustration for details on setting switch positions.

G9SX-NSA222-T03-□

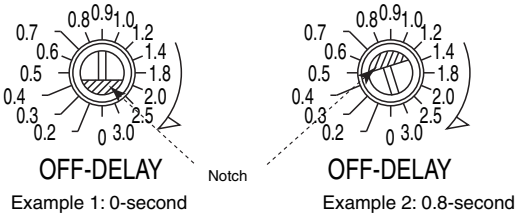

Example 1: 0-second
Example 2: 0.8-second

LED Indicators

Marking	Color	Name	G9SX-NS202	G9SX-NSA222	G9SX-EX	G9SX-EX-T	Function	Reference
PWR	**Green**	**Power supply indicator**	○	○	○	○	Lights while power is supplied.	---
T1	**Orange**	**Safety input #1 indicator**	---	○	---	---	Lights while a high signal is input to T12. Flashes when an error relating to safety input #1 occurs.	✻
T2	**Orange**	**Safety input #2 indicator**	---	○	---	---	Lights while a high signal is input to T22. Flashes when an error relating to safety input #2 occurs.	
NS	**Orange**	**Non-contact Door Switch input indicator**	○	○	---	---	Lights when the Non-contact Door Switch input turns ON. Flashes when an error relating to the Non-contact Door Switch input occurs.	
FB	**Orange**	**Feedback/reset input indicator**	○	○	---	---	Lights in the following cases: With automatic reset while a high signal is input to T33. With manual reset while a high signal is input to T32. Flashes when an error relating to feedback/ reset input occurs.	
AND	**Orange**	**Logical AND input indicator**	○	○	---	---	Lights while a high signal is input to T41. Flashes when an error relating to logical AND connection input occurs.	
EI	**Orange**	**Instantaneous safety output indicator**	○	○	○	---	Lights while the Instantaneous safety outputs (S14, S24, S34) are in the ON state. Flashes when an error relating to the instantaneous safety output occurs.	
ED	**Orange**	**OFF-delayed safety output indicator**	---	○	---	○	Lights while OFF-delayed safety outputs (S44, S54) are in the ON-state. Flashes when an error relating to OFF-delayed safety output occurs.	
ERR	**Red**	**Error indicator**	○	○	○	○	Lights or flashes when an error occurs.	

✻ Refer to *"Fault Detection"* on the next page for details.

Settings Indication (at Power ON)

Settings for the G9SX can be checked by the orange indicators for approx. 3 seconds after the power is turned ON. During this settings indication period, the ERR indicator will light, however the auxiliary error output will remain OFF.

Indicator	Item	Setting position	Indicator status	Setting mode	Setting status
T1	**Cross fault detection mode**	Y1 terminal	Lit	Detection mode	Y1 = open
			Not lit	Non-detection mode	Y1 = 24 VDC
FB	**Reset mode**	T32 or T33 terminal	Lit	Manual reset mode	T33 = 24 VDC
			Not lit	Auto reset mode	T32 = 24 VDC
AND	**Logical AND connection input mode**	Logical AND connection preset switch	Lit	Enable logical AND input	AND
			Not lit	Disable logical AND input	OFF

Fault Detection

When the Non-contact Door Switch Controller detects a fault, the ERR indicator and/or other indicators light up or flash to inform the user about the fault.
Check and take necessary measures referring to the following table, and then re-supply power to the Non-contact Door Switch Controller.

(G9SX-NS202-□/NSA222-T03-□)

ERR indicator	Other indicator	Fault	Expected causes of the fault	Check points and measures to take
Flashes	---	Fault due to electromagnetic disturbance or of internal circuits.	1. Excessive electromagnetic disturbance 2. Failure of the internal circuit	1. Check the disturbance level around the G9SX and the related system. 2. Replace with a new product.
● Lights	T1 flashes	Fault involved with safety input 1	1. Error in the wiring of safety input 1 2. Incorrect setting of cross fault detection input 3. Failure of the circuit of safety input 1	1. Check the wiring to T11 and T12. 2. Check the wiring to Y1. 3. Replace with a new product.
	T2 flashes	Fault involved with safety input 2	1. Error in the wiring of safety input 2 2. Incorrect setting of cross fault detection input 3. Failure of the circuit of safety input 2	1. Check the wiring to T21 and T22. 2. Check the wiring to Y1. 3. Replace with a new product.
	NS flashes	Fault involved with Non-contact Door Switch input	1. Error in the wiring of Non-contact Door Switch input 2. Error in the wiring of Non-contact Door Switch inputs in series connections. 3. Failure of the internal circuits of Non-contact Door Switch inputs 4. Failure of the Non-contact Door Switch	1. Check the wiring to D1 and D2. 2. Check the wiring to the D40A. 3. Replace with a new product. 4. Replace with a new D40A.
	FB flashes	Fault involved with feedback/reset inputs	1. Error in the wiring of feedback/reset input. 2. Failure of the circuit of feedback/ reset input	1. Check the wiring to T31, T32 and T33. 2. Replace with a new product.
		Fault in Expansion Unit	1. Improper feedback signals from Expansion Unit 2. Abnormal supply voltage to Expansion Unit 3. Failure of the circuit of safety relay contact outputs	1. Check the connecting cable of Expansion Unit and the connection of the termination socket. 2. Check the supply voltage to Expansion Unit. **Note:** Make sure that all Expansion Units' PWR indicators are lit. 3. Replace with a new product.
	EI flashes	Fault involved with instantaneous safety outputs, logical AND connection outputs, or auxiliary monitor output	1. Error in the wiring of instantaneous safety outputs 2. Failure of the circuit of instantaneous safety outputs 3. Error in the wiring of the logical AND connection output 4. Failure of the circuit of the logical AND connection output 5. Error in the wiring of the auxiliary monitor output 6. Impermissible high ambient temperature	1. Check the wiring to S14 and S24. 2. Replace with a new product. 3. Check the wiring to L1. 4. Replace with a new product. 5. Check the wiring to X1. 6. Check the ambient temperature and spacing around the G9SX.
	ED flashes	Fault involved with OFF-delayed safety outputs	1. Error in the wiring of OFF-delayed safety relay contact outputs 2. Incorrect set values for OFF-delay time 3. Failure of the circuit of OFF-delayed safety relay contact outputs 4. Impermissible high ambient temperature	1. Check the wiring to S44 and S54. 2. Check the settings of the OFF-delay time setting switch. 3. Replace with a new product. 4. Check the ambient temperature and spacing around the G9SX.

ERR indicator	Other indicator	Fault	Expected causes of the fault	Check points and measures to take
● Lights	◐ AND flashes	Fault involved with logical AND connection input	1. Error in the wiring of the logical AND connection input 2. Incorrect setting for the logical AND connection input 3. Failure of the circuit of the logical AND connection input	1. Check the wiring to T41 and T42. **Note: 1.** Make sure that the wiring length for the T41, T42 terminal is 100 meters or less. **2.** Make sure that the logical AND connection signal is branched for 4 units or fewer. 2. Confirm the set value of the logical AND connection preset switch. 3. Replace with a new product.
	◐ All indicators except PWR flash	Supply voltage outside the rated value	1. Supply voltage outside the rated value	1. Check the supply voltage to the Units.

When indicators other than the ERR indicator flash, check and take necessary actions referring to the following table.

ERR indicator	Other indicators		Fault	Expected cause of the fault	Check points and measures to take
○ Off	T1 T2	◐ flash	Mismatch between input 1 and input 2.	The input status between input 1 and input 2 is different, due to contact failure or a short circuit of safety input device(s) or a wiring fault.	Check the wiring from safety input devices to the G9SX. Or check the input sequence of safety input devices. After removing the fault, turn both safety inputs 1 and 2 to the OFF state.

(Expansion Unit)

ERR indicator	Other indicators	Fault	Expected cause of the fault	Check points and measures to take
● Lights	---	Fault involved with safety relay outputs of Expansion Units	1. Welding of relay contacts 2. Failure of the internal circuit	Replace with a new product.

Application Examples

Example 1: Connection with D40A

Highest achievable PL/safety category	Model	Stop category	Reset
PLd/3 equivalent	Emergency Stop Switch A165E/A22E Non-contact Door Switch D40A Non-contact Door Switch Controller G9SX-NSA222-T03-□	0	Manual

Note: The PL evaluation result on this connection example applies to safety functions related to the D40A Non-Contact Door Switch. The above PL is only the evaluation result of the example. The PL must be evaluated in an actual application by the customer after confirming the usage conditions.

● Application Overview

- The power supply to the motor M is turned OFF immediately when the emergency stop switch S1 is pressed.
- The power supply to the motor M is turned OFF immediately when the S2 detects that the guard is opened.
- The power supply to the motor M is kept OFF until the reset switch S3 is pressed while the guard is closed and the emergency stop switch S1 is released.

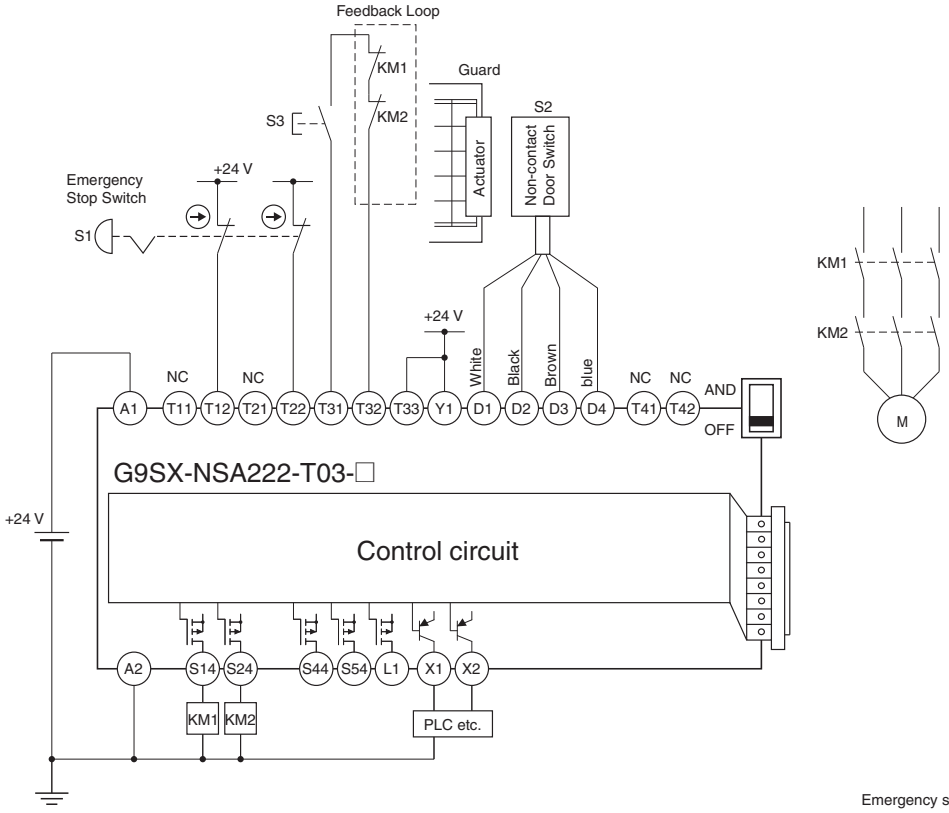

S1: Emergency Stop Switch
S2: Non-contact Door Switch (D40A)
S3: Reset Switch
KM1, KM2: Magnetic contactor
M: Motor

Timing chart

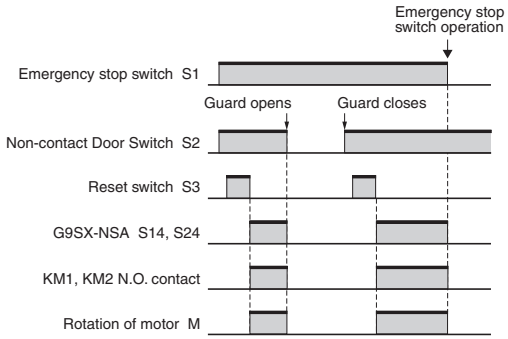

Note: For details on Non-contact Door Switch wiring, refer to page 19 or to the Instruction Sheet.

Example 2: Connection with D40A

Highest achievable PL/safety category	Model	Stop category	Reset
PLd/3 equivalent	Emergency Stop Switch A165E/A22E Non-contact Door Switch D40A Flexible Safety Unit G9SX-BC202-□ Non-contact Door Switch Controller G9SX-NS202-□	0	Emergency Stop Switch: Manual Non-contact Door Switch: Auto

Note: The PL evaluation result on this connection example applies to safety functions related to the D40A Non-Contact Door Switch. The above PL is only the evaluation result of the example. The PL must be evaluated in an actual application by the customer after confirming the usage conditions.

● Application Overview

- The power supply to the motor M1 and M2 is turned OFF immediately when the emergency stop switch S1 is pressed.
- The power supply to the Motor M1 is kept OFF until the reset switch S2 is pressed while the emergency stop switch S1 is released.
- The power supply to the motor M2 is turned OFF immediately when the S3 detects that the guard is opened.
- The power supply to the motor M2 is kept OFF until the reset switch S1 is pressed while the guard is closed and the emergency stop switch S1 is released.

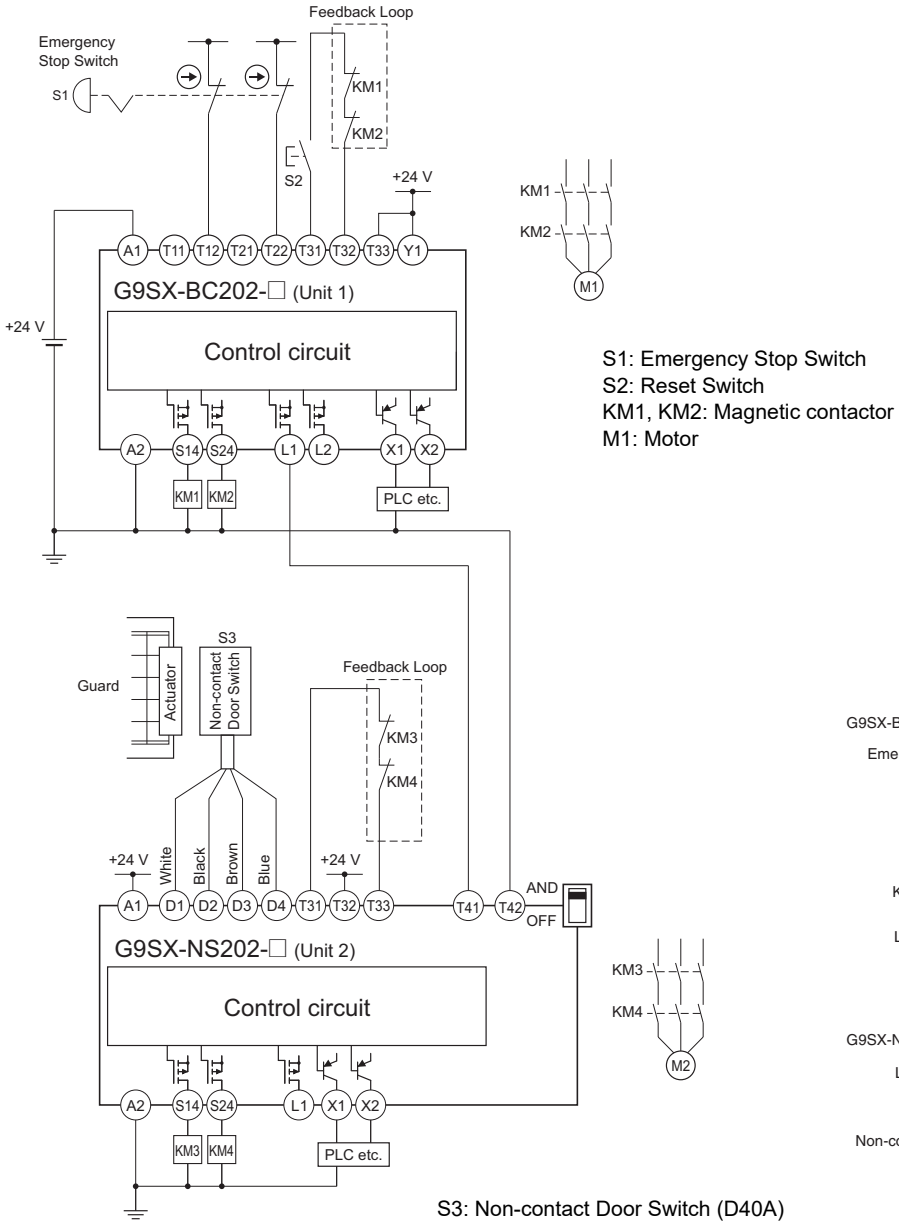

Timing chart

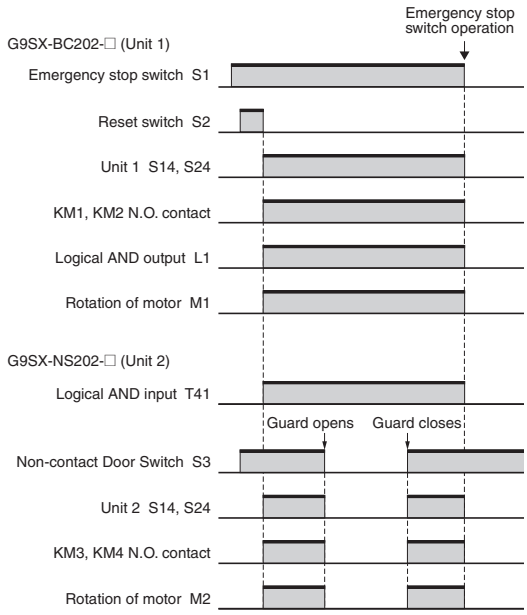

Note: For details on Non-contact Door Switch wiring, refer to page 19 or to the Instruction Sheet.

Example 1: Connection with D40Z

Highest achievable PL/safety category	Model	Stop category	Reset
PLe/4 equivalent	Emergency Stop Switch A165E/A22E Non-contact Door Switch D40Z Non-contact Door Switch Controller G9SX-NSA222-T03-□	0	Manual

Note: The above PL is only the evaluation result of the example. The PL must be evaluated in an actual application by the customer after confirming the usage conditions.

● Application Overview

- The power supply to the motor M1 is turned OFF immediately when the emergency stop switch S1 is pressed.
- The power supply to the motor M1 is turned OFF immediately when the S2 detects that the guard is opened.
- The power supply to the motor M1 is kept OFF until the reset switch S3 is pressed while the guard is closed and the emergency stop switch S1 is released.

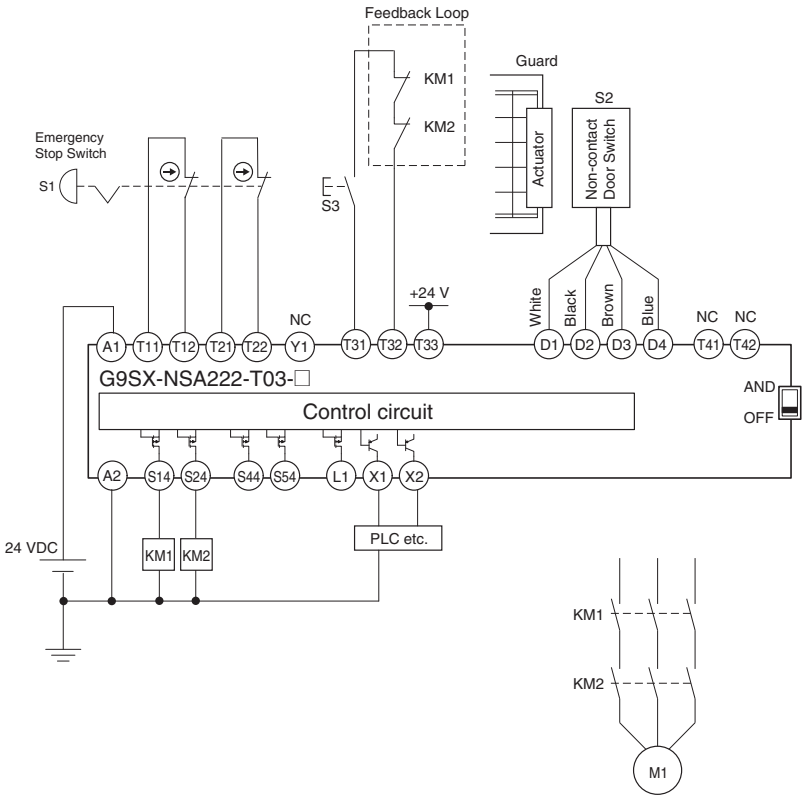

S1: Emergency Stop Switch
S2: Non-contact Door Switch (D40Z)
S3: Reset Switch
KM1, KM2: Magnetic contactor
M1: Motor

Timing chart

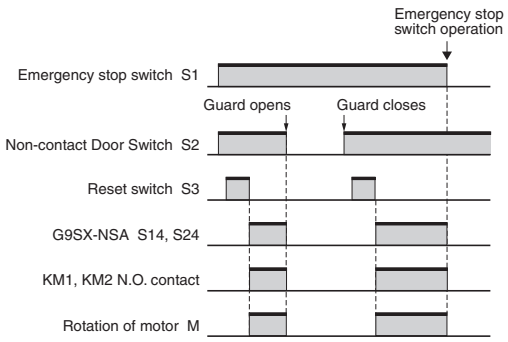

Note: For details on Non-contact Door Switch wiring, refer to page 19 or to the Instruction Sheet.

Example 2: Connection with D40Z

Highest achievable PL/safety category	Model	Stop category	Reset
PLe/4 equivalent	Emergency Stop Switch A165E/A22E Non-contact Door Switch D40Z Flexible Safety Unit G9SX-BC202-□ Non-contact Door Switch Controller G9SX-NS202-□	0	Emergency Stop Switch: Manual Non-contact Door Switch: Auto

Note: The above PL is only the evaluation result of the example. The PL must be evaluated in an actual application by the customer after confirming the usage conditions.

● Application Overview

- The power supply to the motor M1 and M2 is turned OFF immediately when the emergency stop switch S1 is pressed.
- The power supply to the Motor M1 is kept OFF until the reset switch S2 is pressed while the emergency stop switch S1 is released.
- The power supply to the motor M2 is turned OFF immediately when the S3 detects that the guard is opened.
- The power supply to the motor M2 is kept OFF until the reset switch S1 is pressed while the guard is closed and the emergency stop switch S1 is released.

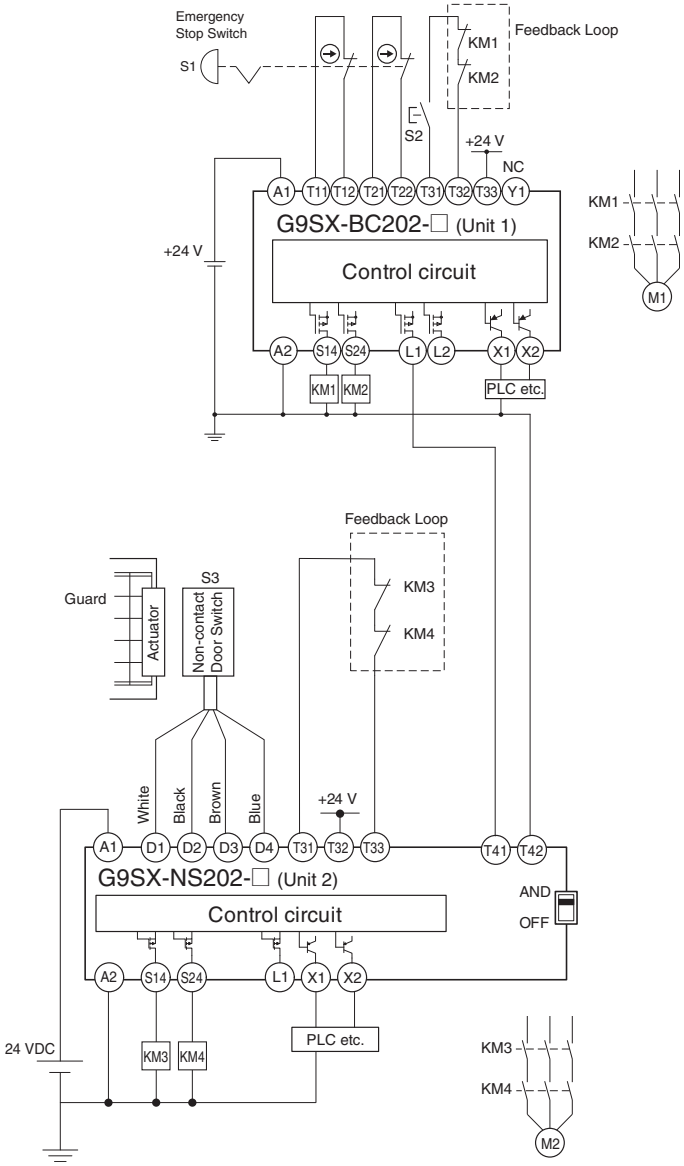

S1: Emergency Stop Switch
S2: Reset Switch
KM1, KM2: Magnetic contactor
M1: Motor

S3: Non-contact Door Switch (D40Z)
KM3, KM4: Magnetic contactor
M2: Motor

Timing chart

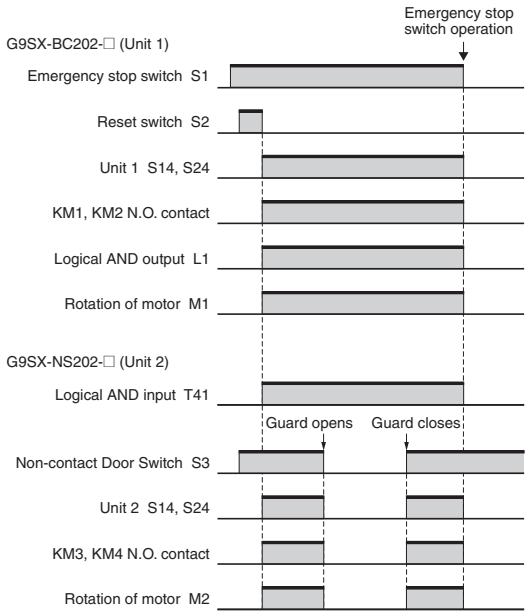

Note: For details on Non-contact Door Switch wiring, refer to page 19 or to the Instruction Sheet.

Safety Precautions

Be sure to read the *Common Precautions for Safety Warning* at the following URL: http://www.ia.omron.com/.

Indication and Meaning for Safe Use

⚠ WARNING	**Indicates a potentially hazardous situation which, if not avoided, will result in minor or moderate injury, or may result in serious injury or death. Additionally there may be significant property damage.**
Precautions for Safe Use	**Supplementary comments on what to do or avoid doing, to use the product safely.**
Precautions for Correct Use	**Supplementary comments on what to do or avoid doing, to prevent failure to operate, or undesirable effect on product performance.**

⚠ WARNING

Serious injury may possibly occur due to breakdown of safety outputs.
Do not connect loads beyond the rated value to the safety outputs.

Serious injury may possibly occur due to loss of required safety functions.
Wire the D40A and G9SX-NS properly so that supply voltages or voltages for loads do NOT touch the safety outputs accidentally.

Serious injury may possibly occur due to damage to safety outputs.
Provide protective circuits against counter-electromotive force if inductive loads are connected to safety outputs.

Serious injury may possibly occur due to loss of safety functions.
Use appropriate devices referring to the information provided below.

The machine may start operating and may result in serious injury or death.
Do not put the actuator close to the switch when the door is open.

Control device	Requirements
Emergency stop switch	Use approved device with direct opening mechanism complying with IEC/EN 60947-5-1.
Safety door switch, Safety limit switch	Use approved device with direct opening mechanism complying with IEC/EN 60947-5-1 and capable of switching micro loads of 24 VDC, 5 mA.
Non-contact Door Switch	The G9SX-NS must be used with D40A Non-contact Door Switches.
Relay with forcibly guided contacts	Use approved devices with forcibly guided contacts complying with IEC 61810-3 (EN 50205). For feedback, use devices with contacts capable of switching micro loads of 24 VDC, 5 mA.
Contactor	Use approved devices complying with IEC/EN 60947-4-1 for auxiliary contact linked with power contact (mirror contact). For feedback, use devices with contacts capable of switching micro loads of 24 VDC, 5 mA.
Other devices	Evaluate whether devices used are appropriate to satisfy the requirements of the safety category level.

Precautions for Safe Use

<D40A/G9SX-NS□>

1. Disconnect the G9SX-NS from the power supply when wiring the D40A.
   1. Turn OFF the load power supply before wiring. Failure to do so may cause electric shock.
   2. Devices connected to the product may operate unexpectedly.
2. Do not operate the product in atmospheres containing flammable or explosive gas. Arcs or heating of relays during switching may cause fire or explosion.
3. Wire conductors correctly and verify the operation of the product before using the system in which the product is incorporated. Incorrect wiring may lead to loss of safety functions.
4. Do not dismantle, repair, or modify the product. Doing so may lead to loss of safety functions.

<D40A>

5. Auxiliary monitoring outputs are NOT safety outputs. Do not use auxiliary monitoring outputs as safety outputs. Such incorrect use will cause loss of safety function of D40A and peripheral devices.
6. After installing the D40A, qualified personnel must confirm the installation, and must conduct test operations and maintenance. The qualified personnel must be qualified and authorized to secure safety at each phases of design, installation, running, maintenance, and disposal of the system.
7. A qualified person in charge, who is familiar with the machine in which the D40A is to be installed, must conduct and verify the installation.
8. Be sure to inspect the D40A daily and every 6 months. Otherwise, serious injury may possibly occur due to system malfunctions.
9. Connect the D40A to only appropriate components or devices complying with relevant safety standards corresponding to the required level of safety category. Conformity to requirements of the safety category must be determined for the entire system. It is recommended to consult an authorized certification body regarding assessment of conformity to the required safety level.

<G9SX-NS□>

10. Use the G9SX within an enclosure with a IP54 degree of protection or higher according to IEC/EN 60529.
11. Do not apply DC voltages exceeding the rated voltages, nor any AC voltages to G9SX-NS□. Do not connect to DC distribution network.
12. Use a DC supply satisfying the requirements given below to prevent electric shock.
    - A DC power supply with double or reinforced insulation, for example, according to IEC/EN 60950 or EN 50178, or a transformer according to IEC/EN 61558.
    - A DC supply satisfying the requirements for class 2 circuits or limited voltage/current circuits stated in UL 508.
13. Properly apply the specified voltages to the inputs. Applying inappropriate voltages may cause the product to fail to perform its specified function, which could lead to the loss of safety functions or damages to the product.
14. Auxiliary error outputs and auxiliary monitoring outputs are NOT safety outputs. Do not use these outputs as safety outputs. Such incorrect use will cause loss of safety functions of the G9SX and its relevant system. Also logical AND connection outputs can only be used for logical AND connections with the G9SX-□.
15. After installing the G9SX-NS□, qualified personnel must confirm the installation, and must conduct test operations and maintenance. The qualified personnel must be qualified and authorized to secure safety at each phases of design, installation, running, maintenance, and disposal of system.
16. A qualified person in charge, who is familiar with the machine in which G9SX-NS□ is to be installed, must conduct and verify the installation.
17. Perform daily and 6-month inspections for the G9SX-NS□. Otherwise, the system may fail to work properly, resulting in serious injury.

18. Connect to the G9SX-NS□ only appropriate components or devices complying with relevant safety standards corresponding to the required level of safety category.
Conformity to requirements of safety category must be determined as an entire system. It is recommended to consult an authorized certification body regarding assessment of conformity to the required safety level.
19. OMRON is not responsible for conformity with any safety standards covering the customer's entire system.
20. Be careful not to have your fingers caught when mounting terminal blocks.
21. The service life will depend on the switching conditions. Be sure to check the actual operating conditions using the actual devices, and make sure that the number of switching operations will not cause performance problems.

Precautions for Correct Use

<D40A/G9SX-NS□>

1. Handle with Care.
Do not drop the product or expose it to excessive vibration or mechanical shock. The product may be damaged and may not function properly.
2. Storage and Operating Conditions
Do not store or use the products under the following conditions.
1. In direct sunlight
2. At ambient temperatures not between –10 and 55°C
3. At relative humidity not between 25% and 85% or under temperature changes that could causes condensation
4. In corrosive or combustible gases
5 Where subject to vibration or mechanical shock beyond the rated values
6. Where subject to contact with water, oil, or chemicals
7. In an atmosphere containing excessive dust, saline, or metal powder
8. Where iron filings or powder may fall on the product

3. D40A is a class A product.In residential areas D40A may cause radio interference, in which case the user may be required to take adequate measures to reduce interference.

<D40A>

4. Always use the D40A/G9SX-NS together with the special actuator and a G9X-NS□ Controller. If you use any other OMRON Safety Controller, confirm applicability in the manual for the Safety Controller.
5. Use cables with a length of less than 100 m total to connect D40A Switches. The supply voltage to D40A may decrease by the voltage drop depending on the cable or the wiring configuration. Check the power-supply voltage is in the rated range.

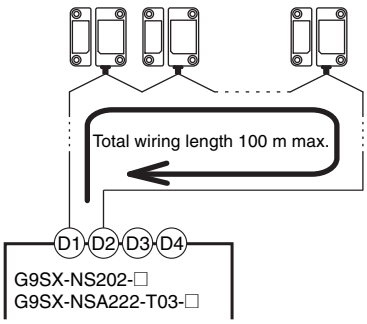

6. Disconnect the G9SX-NS□ from the power supply when replacing the D40A. Devices connected to the G9SX-NS□ may operate unexpectedly.
7. Adhesion of solvent such as alcohol, thinner, trichlorobenzene or gasoline on the product should be avoided.
Such solvents make the marking on D40A illegible and cause deterioration of parts.
8. Do not use the D40A in a magnetic field of 1.5 mT or higher. The D40A may not function properly.
9. Do not use the D40A in the water or in an environment continuously exposed to water. Water may penetrate into the D40A. (The IP67 degree of protection for this switch means that it has been checked for penetration of water after having been left in water for a fixed period of time.)
10. Do not use the switch or actuator as a stopper. Protect the switch and the actuator by installing a stopper. Separate the switch and the actuator to a distance of 1 mm or more.
11. Install the actuator and switch at an appropriate distance so that they do not create a gap that provides access to the hazard.

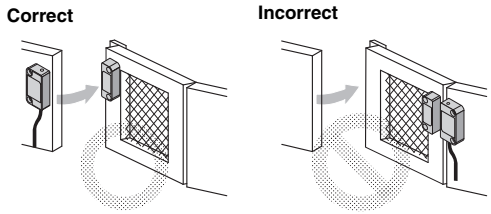

12. When two or more Switches are mounted side-by-side, they must be no closer than 25 mm in the X, Y, and Z directions.

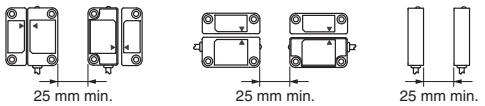

13. Check that the machine is stopped whenever the interlocked guard door is open.

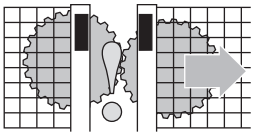

14. Do not mount the switch and actuator on magnetic materials, otherwise it may affect the operating distance.

Distance from surface of magnetic body	Operating distance
0 to 5 mm	Reduce to approx. 90% of original value.
5 mm or longer	No influence.

15. Tighten all screws to the specified torque by using non-magnetic M4 screws with a maximum diameter of 7 mm and washer for the installation of the switch and actuator. After installation and using, the actuator and switch fixing screws must be coated with tamper proof varnish or similar
compound. Using anaerobic locking compounds can have a detrimental effect on the plastic switch case if the compounds come into contact with the switch case.

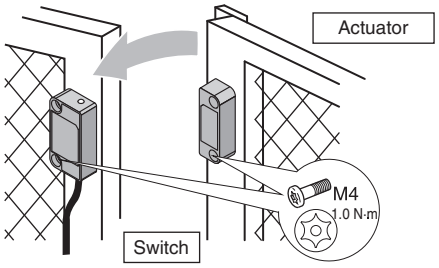

16. Wiring
1. Use the following to wire to the product.
   Stranded wire (flexible wire): 0.2 to 2.5 mm^2 (AWG24 to AWG12)
   Solid wire (steel wire): 0.2 to 2.5 mm^2 (AWG24 to AWG12)
2. When an auxiliary output is not used, cut off the wiring and cover it with tape so that it does not contact other terminals.
3. When you use an additional cable of 20m or longer, use a multiconductor cable to group the white, black, brown, and blue lines together.

17. Handle cables with care
1. For bending cables, it is recommended to bend them with a radius of bend no less than six times the cable outer diameter.
2. Do not apply a tensile strength of 50N or greater to the cables.
3. For the handling of the XS2F/XS2W connector with cable, refer to Precautions for Correct Use of the XS2 series.

18. If there is any machine that has a large surge current (e.g., amotor) near D40A, connect a surge absorber to D40A between the blue and the other cables (white, black, brown, and yellow), respectively.
Suggested surge absorber's specification is as follows:
- Peak pulse power: 600W (10/1000 ms) or more (Per IEC61000-4-5(surge immunity))
- Breakdown voltage: 27-33V

<G9SX-NS□>

19. Mounting
Mount the G9SX-NS to a DIN rail using End Plates (PFP-M, not included with the product) so that the G9SX-NS does not fall off of the rails due to vibration or other causes, especially when the length of DIN railing is short compared to the width of the G9SX-NS□.

20. The following space must be provided around the G9SX-NS□ to enable applying the rated current to the outputs of the G9SX-NS□, to ensure sufficient ventilation, and to enable wiring:
1. At least 25 mm between side surfaces of the G9SX-NS□
2. At least 50 mm above the top surface of the G9SX-NS□ and below the bottom surface of the G9SX-NS□.

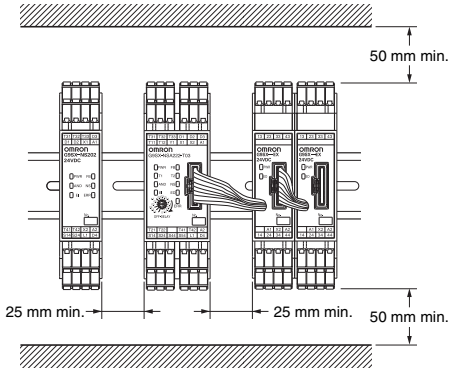

21. Wiring
1. G9SX-NS□-RT (with Screw Terminals)
   - Use the following to wire the G9SX-NS□-RT.

Solid wire (steel wire)	0.2 to 2.5 mm^2 (AWG24 to AWG12)
Stranded wire (flexible wire)	0.2 to 2.5 mm^2 (AWG24 to AWG12)

   - Tighten each screw to the specified torque of 0.5 to 0.6 N·m, or the G9SX-NS□ may malfunction or generate heat.
   - Strip the wire for no longer than 7 mm.
2. G9SX-NS□-RC (with Spring-cage Terminals)
   - Use the following to wire the G9SX-NS□-RC.

Solid wire (steel wire)	0.2 to 2.5 mm^2 (AWG24 to AWG12)
Stranded wire (flexible wire)	0.2 to 2.5 mm^2 (AWG24 to AWG12)

   - Strip the wire for no longer than 7 mm.
3. Logical AND Connections
   - Use VCTF cables or shielded cables for logical AND connect ions between Units.

22. Connecting G9SX-EX□-□ Expansion Units
1. Remove the terminating connector from the connector on the G9SX-NSA222-T03□. Insert the connector on the connecting cable of Expansion Unit into the connector on the G9SX-NSA222-T03-□.
2. Connect the terminating connector to the connector on the Expansion Unit at the end position.
   When the G9SX-NSA222-T03-□ is used without Expansion Units, leave the terminating connector on the G9SX-NSA222-T03-□.
3. Do not remove the terminating connector or connecting cables of Expansion Units while the system is operating.
4. Before applying the supply voltage, confirm that the connectors are locked firmly.
5. All of the Expansion Units must be supplied with its specified voltages within 10 s after the connected G9SX-NSA222-T03-□ is supplied with voltage.
   Otherwise, the G9SX-NSA222-T03-□ will detect a power supply error for the Expansion Units.

23. Use cables with a length of less than 100 m total to connect the safety inputs, feedback/reset inputs, and logical AND connection inputs and outputs.

24. Set the time duration of OFF-delay to an appropriate value that does not cause the loss of safety functions of system.
25. Logical AND connections between Units (Refer to *"Functions"* on page 23.)
1. To use logical AND connection inputs, enable the logical AND connection input for the G9SX-NS□ that will receive the inputs.
2. Connect the logical AND connection inputs appropriately to the logical AND connection outputs of the G9SX-□.
3. When configuring the safety system, be sure to consider that the delay of response time caused by logical AND connection does not degrade the safety functions of the system. (Refer to *"Response Time and Operating Time"* on page 17.)

26. To determine safety distance to hazards, take into account the delay of safety outputs caused by the following time:
1. Response time of safety inputs
2. Response time of D40A Non-contact Door Switch inputs
3. Response time of logical AND connection input (Refer to *"Response Time and Operating Time"* on page 17.)
4. Preset OFF-delay time
5. Accuracy of OFF-delay time

27. Start the rest of the system after 5 s or longer has passed since applying supply voltage to all G9SX-□ in the system.
28. Be sure to ground the A2 terminal of the power supply to help prevent malfunctions caused by noise. Also, connect a surge absorber to each end of the coil on inductive loads to reduce noise generation. When sharing a power supply with a Light Curtain, use a DC power supply that will not fail for a momentary power interruption of 20 ms or less.
29. Devices connected to the G9SX-NS may operate unexpectedly. When replacing the G9SX-NS, disconnect it from power supply.
30. Adhesion of solvent
Do not allow organic solvents, such as alcohol, thinner, trichloroethane, or gasoline, to come into contact with the product. Such solvents make the markings on G9SX-NS illegible and cause deterioration of parts.
31. Do not mix AC and DC circuits for contact outputs in a single G9SX-EX□-□. When using AC and DC circuits, connect at least two G9SX-EX□-□ Units and use them respectively as dedicated DC-circuit and AC-circuit contact outputs.
32. Safety Application Controller's Relay durability depends greatly on the switching condition. Confirm the actual conditions of operation in which the Relay will be used in order to make sure the permissible number of switching operations.
When the accumulated number of operation exceeds its permissible range, it can cause failure of reset of safety control circuit. In such case, please replace the Relay or the Safety Application Controller immediately.
If the Relay or the Safety Application Controller is used continuously without replacing, then it can lead to loss of safety function.
33. Operate the reset input more than 0.4 seconds immediately after the safety outputs are OFF.
G9SX does not accept the reset input from when the outputs are turned ON and until 0.4 seconds passes after the outputs are turned OFF.

Switch and Actuator Operation

Switch and Actuator Mounting Directions

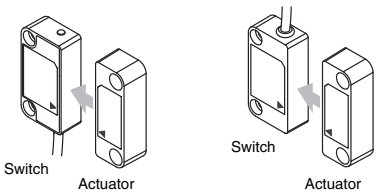

Switch and Actuator Operating Directions

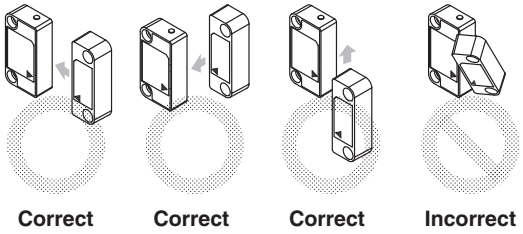

Safety Categories (EN ISO13849-1)

You can use the D40A with the G9SX-NS□ for applications in PLd and Safety Category 3 environments defined in the EN ISO13849-1 European standard and the ISO 13849-1 international standard. Compliance was determined using circuit examples specified by OMRON and may not be applicable to all conditions.
Safety categories are determined for the overall safety control system. Confirm compliance sufficiently with your application.

Requirements for Safety Category 3 (EN ISO 13849-1)

1. Connect external input D1-D2 and external output D3-D4 to D40A Switches.
2. Input two channels for external inputs T11-T12 and T21-T22.
3. Input external inputs T11-T12 and T21-T22 from switches with direct opening mechanisms. For limit switches, make sure at least one of the switches has a direct opening mechanism.
4. Input the NC signal from the contactor to T31-T32 for a manual reset and to T31-T33 for an auto reset. (Refer to *"Application Examples"* on page 28)
5. Make sure to connect the A2 terminal to ground.

Standards Certification

Directives

<D40A/G9SX-NS□>
- EMC Directive
- Machinery Directive

Standards/UL Certification

<D40A>
- EN ISO 13849-1 PLd/Safety Category 3 (Used with D40A and G9SX-NS□)
- EN 61508 SIL 3 (Used with D40A and G9SX-NS□)
- EN 60947-5-3 (Used with D40A and G9SX-NS□)
- IEC/EN 61000-6-4
- EN ISO14119 (Used with D40A and G9SX-NS□)
- UL 508
- CAN/CSA C22.2 No.14
- KOSHA certification (excluding connector model)

<G9SX-NS□>
- EN ISO 13849-1 PLd/Safety Category 3 (Used with D40A)
- EN ISO 13849-1 PLe/Safety Category 4 (Used with D40Z)
- IEC/EN 61508 SIL3
- IEC/EN 61000-6-2
- IEC/EN 61000-6-4
- UL508
- UL1998
- CAN/CSA C22.2 No.142

Terms and Conditions Agreement

Read and understand this catalog.

Please read and understand this catalog before purchasing the products. Please consult your OMRON representative if you have any questions or comments.

Warranties.

(a) Exclusive Warranty. Omron's exclusive warranty is that the Products will be free from defects in materials and workmanship for a period of twelve months from the date of sale by Omron (or such other period expressed in writing by Omron). Omron disclaims all other warranties, express or implied.

(b) Limitations. OMRON MAKES NO WARRANTY OR REPRESENTATION, EXPRESS OR IMPLIED, ABOUT NON-INFRINGEMENT, MERCHANTABILITY OR FITNESS FOR A PARTICULAR PURPOSE OF THE PRODUCTS. BUYER ACKNOWLEDGES THAT IT ALONE HAS DETERMINED THAT THE PRODUCTS WILL SUITABLY MEET THE REQUIREMENTS OF THEIR INTENDED USE.

Omron further disclaims all warranties and responsibility of any type for claims or expenses based on infringement by the Products or otherwise of any intellectual property right. (c) Buyer Remedy. Omron's sole obligation hereunder shall be, at Omron's election, to (i) replace (in the form originally shipped with Buyer responsible for labor charges for removal or replacement thereof) the non-complying Product, (ii) repair the non-complying Product, or (iii) repay or credit Buyer an amount equal to the purchase price of the non-complying Product; provided that in no event shall Omron be responsible for warranty, repair, indemnity or any other claims or expenses regarding the Products unless Omron's analysis confirms that the Products were properly handled, stored, installed and maintained and not subject to contamination, abuse, misuse or inappropriate modification. Return of any Products by Buyer must be approved in writing by Omron before shipment. Omron Companies shall not be liable for the suitability or unsuitability or the results from the use of Products in combination with any electrical or electronic components, circuits, system assemblies or any other materials or substances or environments. Any advice, recommendations or information given orally or in writing, are not to be construed as an amendment or addition to the above warranty.

See http://www.omron.com/global/ or contact your Omron representative for published information.

Limitation on Liability; Etc.

OMRON COMPANIES SHALL NOT BE LIABLE FOR SPECIAL, INDIRECT, INCIDENTAL, OR CONSEQUENTIAL DAMAGES, LOSS OF PROFITS OR PRODUCTION OR COMMERCIAL LOSS IN ANY WAY CONNECTED WITH THE PRODUCTS, WHETHER SUCH CLAIM IS BASED IN CONTRACT, WARRANTY, NEGLIGENCE OR STRICT LIABILITY.

Further, in no event shall liability of Omron Companies exceed the individual price of the Product on which liability is asserted.

Suitability of Use.

Omron Companies shall not be responsible for conformity with any standards, codes or regulations which apply to the combination of the Product in the Buyer's application or use of the Product. At Buyer's request, Omron will provide applicable third party certification documents identifying ratings and limitations of use which apply to the Product. This information by itself is not sufficient for a complete determination of the suitability of the Product in combination with the end product, machine, system, or other application or use. Buyer shall be solely responsible for determining appropriateness of the particular Product with respect to Buyer's application, product or system. Buyer shall take application responsibility in all cases.

NEVER USE THE PRODUCT FOR AN APPLICATION INVOLVING SERIOUS RISK TO LIFE OR PROPERTY OR IN LARGE QUANTITIES WITHOUT ENSURING THAT THE SYSTEM AS A WHOLE HAS BEEN DESIGNED TO ADDRESS THE RISKS, AND THAT THE OMRON PRODUCT(S) IS PROPERLY RATED AND INSTALLED FOR THE INTENDED USE WITHIN THE OVERALL EQUIPMENT OR SYSTEM.

Programmable Products.

Omron Companies shall not be responsible for the user's programming of a programmable Product, or any consequence thereof.

Performance Data.

Data presented in Omron Company websites, catalogs and other materials is provided as a guide for the user in determining suitability and does not constitute a warranty. It may represent the result of Omron's test conditions, and the user must correlate it to actual application requirements. Actual performance is subject to the Omron's Warranty and Limitations of Liability.

Change in Specifications.

Product specifications and accessories may be changed at any time based on improvements and other reasons. It is our practice to change part numbers when published ratings or features are changed, or when significant construction changes are made. However, some specifications of the Product may be changed without any notice. When in doubt, special part numbers may be assigned to fix or establish key specifications for your application. Please consult with your Omron's representative at any time to confirm actual specifications of purchased Product.

Errors and Omissions.

Information presented by Omron Companies has been checked and is believed to be accurate; however, no responsibility is assumed for clerical, typographical or proofreading errors or omissions.

Refer to the catalog below for information on corresponding safety components.

Safety Controllers
G9SX Series

Cat.No.F120

Safety Controller
G9SP

Cat.No.F090

Safety I/O Units
NX-SI/SO

Cat.No.F123

Compact Non-contact
Door Switch
D40Z

Cat.No.C145

Non-Contact Safety
Door Switch
D40A-2

Cat.No.F134

Note: Do not use this document to operate the Unit.

OMRON Corporation **Industrial Automation Company**

Kyoto, JAPAN **Contact : www.ia.omron.com**

Regional Headquarters

OMRON EUROPE B.V.
Wegalaan 67-69, 2132 JD Hoofddorp
The Netherlands
Tel: (31) 2356-81-300 Fax: (31) 2356-81-388

OMRON ELECTRONICS LLC
2895 Greenspoint Parkway, Suite 200
Hoffman Estates, IL 60169 U.S.A.
Tel: (1) 847-843-7900 Fax: (1) 847-843-7787

OMRON ASIA PACIFIC PTE. LTD.
438B Alexandra Road, #08-01/02 Alexandra
Technopark, Singapore 119968
Tel: (65) 6835-3011 Fax: (65) 6835-3011

OMRON (CHINA) CO., LTD.
Room 2211, Bank of China Tower,
200 Yin Cheng Zhong Road,
PuDong New Area, Shanghai, 200120, China
Tel: (86) 21-6023-0333 Fax: (86) 21-5037-2388

Authorized Distributor:

©OMRON Corporation 2006-2024 All Rights Reserved.
In the interest of product improvement,
specifications are subject to change without notice.

CSM_10_6
Cat. No. C140-E1-04 1024 (0906)